04-393 DC INV Tech p a-44 12/15/04 3:04 PM Page a

Technibel Climatisation

# INSTALLATION INSTRUCTIONS

## – PACKAGE Air Conditioner –

DC Inverter R410A

### ■ R410A Models

**Indoor Units**

| | Indoor Unit Type | 12 | 16 | 18 | 25 | 36 | 48 |
|---|---|---|---|---|---|---|---|
| CAFP* | 4-Way Air Discharge Semi-Concealed | CAFP 124 R | CAFP 164 R | CAFP 184 R | CAFP 254 R | CAFP 364 R | CAFP 484 R |
| MAFP | Wall-Mounted | MAFP 125 R | MAFP 165 R | MAFP 185 R | MAFP 255 R | | |
| SPAFP | Ceiling-Mounted | SPAFP 124 R | SPAFP 164 R | SPAFP 184 R | SPAFP 255 R | SPAFP 365 R | SPAFP 485 R |
| DSAFP | Concealed-Duct | DSAFP 124 R | DSAFP 164 R | DSAFP 184 R | DSAFP 255 R | DSAFP 365 R | DSAFP 485 R |

* For this type of Indoor unit (CAFP), please see the Installation Instructions accompanying the unit

**Outdoor Units**

| | | |
|---|---|---|
| GRFP | Outdoor Units | GRFP 255 R, GRFP 365 R, GRFP 485 R |
| | | GRFP 255 L, GRFP 365 L, GRFP 485 L |

Refrigerant R410A is used in the outdoor units.

**Optional Controllers**

| | | |
|---|---|---|
| K | Remote Controller | K70D036Z |
| | Wireless Remote Controller (For CAFP type) | K70D037Z |
| | Wireless Remote Controller (For SPAFP type) | K70D040Z |
| | Wireless Remote Controller+rceiver (for all types) | K70D039Z |
| | Wireless Remote Controller (For MAFP type) | K70D041Z |
| | Simplified Remote Controller | K70D042Z |
| | Remote Sensor | K70D050Z |
| | System Controller | K70D043Z |
| | Schedule Timer | K70D046Z |



85464359728000 2005

Ⓦ

04-393 DC INV Tech p a-44 12/15/04 3:04 PM Page 2

# IMPORTANT!
# Please Read Before Starting

This air conditioning system meets strict safety and operating standards. As the installer or service person, it is an important part of your job to install or service the system so it operates safely and efficiently.

**For safe installation and trouble-free operation, you must:**

- Carefully read this instruction booklet before beginning.
- Follow each installation or repair step exactly as shown.
- Observe all local, state, and national electrical codes.
- Pay close attention to all warning and caution notices given in this manual.



**WARNING** This symbol refers to a hazard or unsafe practice which can result in severe personal injury or death.



**CAUTION** This symbol refers to a hazard or unsafe practice which can result in personal injury or product or property damage.

### If Necessary, Get Help

These instructions are all you need for most installation sites and maintenance conditions. If you require help for a special problem, contact our sales/service outlet or your certified dealer for additional instructions.

### In Case of Improper Installation

The manufacturer shall in no way be responsible for improper installation or maintenance service, including failure to follow the instructions in this document.

## SPECIAL PRECAUTIONS

### WARNING When Wiring



**ELECTRICAL SHOCK CAN CAUSE SEVERE PERSONAL INJURY OR DEATH. ONLY A QUALIFIED, EXPERIENCED ELECTRICIAN SHOULD ATTEMPT TO WIRE THIS SYSTEM.**

- Do not supply power to the unit until all wiring and tubing are completed or reconnected and checked.
- Highly dangerous electrical voltages are used in this system. Carefully refer to the wiring diagram and these instructions when wiring. Improper connections and inadequate grounding can cause **accidental injury or death.**
- **Ground the unit** following local electrical codes.
- Connect all wiring tightly. Loose wiring may cause overheating at connection points and a possible fire hazard.

### When Transporting

Be careful when picking up and moving the indoor and outdoor units. Get a partner to help, and bend your knees when lifting to reduce strain on your back. Sharp edges or thin aluminum fins on the air conditioner can cut your fingers.

### When Installing…

**…In a Room**

Properly insulate any tubing run inside a room to prevent "sweating" that can cause dripping and water damage to walls and floors.

**…In Moist or Uneven Locations**

Use a raised concrete pad or concrete blocks to provide a solid, level foundation for the outdoor unit. This prevents water damage and abnormal vibration.

**…In an area with High Winds**

Securely anchor the outdoor unit down with bolts and a metal frame. Provide a suitable air baffle.

**…In a Snowy Area (for Heat Pump-type Systems)**

Install the outdoor unit on a raised platform that is higher than drifting snow. Provide snow vents.

### When Connecting Refrigerant Tubing

- Ventilate the room well, in the event that is refrigerant gas leaks during the installation. Be careful not to allow contact of the refrigerant gas with a flame as this will cause the generation of poisonous gas.
- Keep all tubing runs as short as possible.
- Use the flare method for connecting tubing.
- Apply refrigerant lubricant to the matching surfaces of the flare and union tubes before connecting them, then tighten the nut with a torque wrench for a leak-free connection.
- Check carefully for leaks before starting the test run.

**NOTE**

Depending on the system type, liquid and gas lines may be either narrow or wide. Therefore, to avoid confusion the refrigerant tubing for your particular model is specified as either "narrow" or "wide" than as "liquid" or "gas."

### When Servicing

- Turn the power OFF at the main power box (mains) before opening the unit to check or repair electrical parts and wiring.
- Keep your fingers and clothing away from any moving parts.
- Clean up the site after you finish, remembering to check that no metal scraps or bits of wiring have been left inside the unit being serviced.



**CAUTION**

- Ventilate any enclosed areas when installing or testing the refrigeration system. Escaped refrigerant gas, on contact with fire or heat, can produce dangerously toxic gas.
- Confirm after installation that no refrigerant gas is leaking. If the gas comes in contact with a burning stove, gas water heater, electric room heater or other heat source, it can cause the generation of poisonous gas.

## Check of Density Limit

**The room in which the air conditioner is to be installed requires a design that in the event of refrigerant gas leaking out, its density will not exceed a set limit.**

The refrigerant (R410A), which is used in the air conditioner, is safe, without the toxicity or combustibility of ammonia, and is not restricted by laws imposed to protect the ozone layer. However, since it contains more than air, it poses the risk of suffocation if its density should rise excessively. Suffocation from leakage of refrigerant is almost non-existent. With the recent increase in the number of high density buildings, however, the installation of multi air conditioner systems is on the increase because of the need for effective use of floor space, individual control, energy conservation by curtailing heat and carrying power, etc.

Most importantly, the multi air conditioner system is able to replenish a large amount of refrigerant compared to conventional individual air conditioners. If a single unit of the multi air conditioner system is to be installed in a small room, select a suitable model and installation procedure so that if the refrigerant accidentally leaks out, its density does not reach the limit (and in the event of an emergency, measures can be made before injury can occur).

In a room where the density may exceed the limit, create an opening with adjacent rooms, or install mechanical ventilation combined with a gas leak detection device. The density is as given below.

$$\frac{\textbf{Total amount of refrigerant (kg)}}{\textbf{Min. volume of the indoor unit installed room (m}^3\textbf{)}} \leq \textbf{Density limit (kg/m}^3\textbf{)}$$

The density limit of refrigerant which is used in multi air conditioners is 0.3 kg/m$^3$ (ISO 5149).

**NOTE**

1. If there are 2 or more refrigerating systems in a single refrigerating device, the amount of refrigerant should be as charged in each independent device.

For the amount of charge in this example:

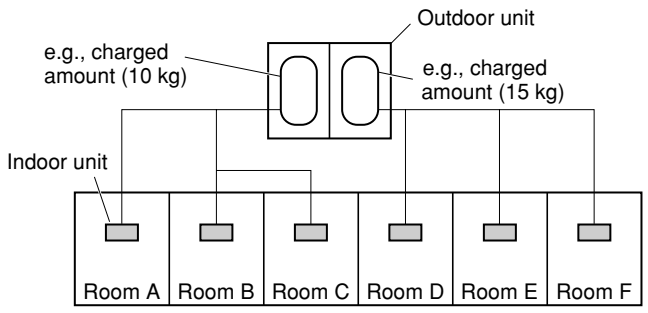


The possible amount of leaked refrigerant gas in rooms A, B and C is 10 kg.
The possible amount of leaked refrigerant gas in rooms D, E and F is 15 kg.

2. The standards for minimum room volume are as follows.

(1) No partition (shaded portion)

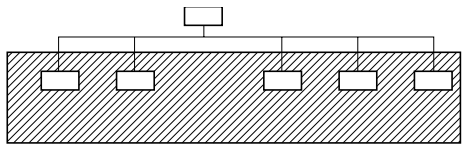

(2) When there is an effective opening with the adjacent room for ventilation of leaking refrigerant gas (opening without a door, or an opening 0.15% or larger than the respective floor spaces at the top or bottom of the door).

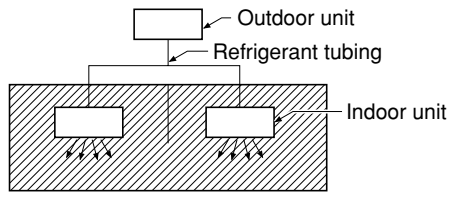


(3) If an indoor unit is installed in each partitioned room and the refrigerant tubing is interconnected, the smallest room of course becomes the object. But when mechanical ventilation is installed interlocked with a gas leakage detector in the smallest room where the density limit is exceeded, the volume of the next smallest room becomes the object.

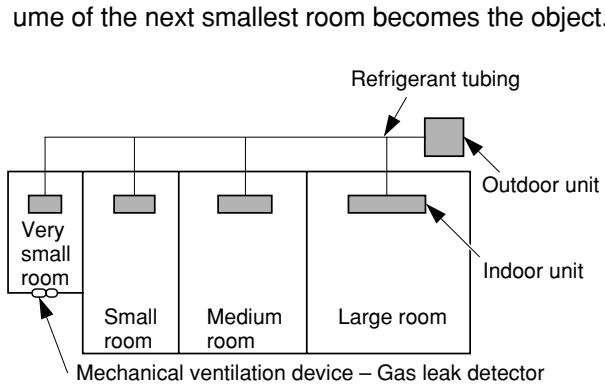


3. The minimum indoor floor space compared with the amount of refrigerant is roughly as follows (for room with 2.7 m high ceiling):

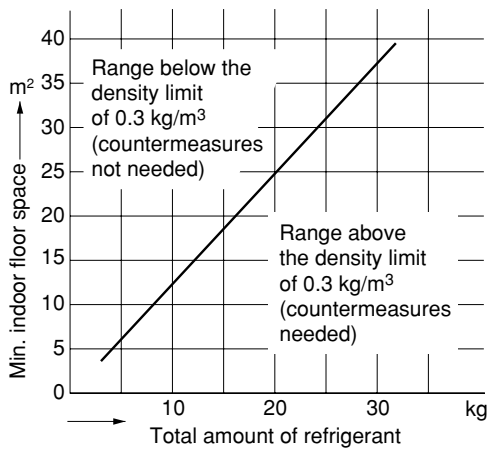

## Precautions for Installation Using New Refrigerant

### 1. Care regarding tubing

1-1. Process tubing

- Material: Use C1220 phosphorous deoxidized copper specified in JIS H3300 “Copper and Copper Alloy Seamless Pipes and Tubes.”
- **Tubing size: Be sure to use the sizes indicated in the table below.**
- Use a tube cutter when cutting the tubing, and be sure to remove any flash. This also applies to distribution joints (optional).
- When bending tubing ϕ15.88 or smaller, use a bending radius that is 4 times the outer diameter of the tubing or larger.

**CAUTION**

**Use sufficient care in handling the tubing. Seal the tubing ends with caps or tape to prevent dirt, moisture, or other foreign substances from entering. These contaminants can result in system malfunction.**

Unit: mm

| Material | | 0 | | | |
|---|---|---|---|---|---|
| Copper tube | Outer diameter | 6.35 | 9.52 | 12.7 | 15.88 |
| | Wall thickness | 0.8 | 0.8 | 0.8 | 1.0 |

1-2. Prevent impurities including water, dust and oxide from entering the tubing. Impurities can cause R410A refrigerant deterioration and compressor defects. Due to the features of the refrigerant and refrigerating machine oil, the prevention of water and other impurities becomes more important than ever.

### 2. Be sure to recharge the refrigerant only in liquid form.

2-1. Since R410A is a non-azeotrope, recharging the refrigerant in gas form can lower performance and cause defects of the unit.

2-2. Since refrigerant composition changes and performance decreases when gas leaks, collect the remaining refrigerant and recharge the required total amount of new refrigerant after fixing the leak.

### 3. Different tools required

3-1. Tool specifications have been changed due to the characteristics of R410A. Some tools for R22- and R407C-type refrigerant systems cannot be used.

| Item | New tool | R407C tools compatible with R410A | Remarks |
|---|---|---|---|
| Manifold gauge | Yes | No | Types of refrigerant, refrigerating machine oil, and pressure gauge are different. |
| Charge hose | Yes | No | To resist higher pressure, material must be changed. |
| Vacuum pump | Yes | Yes | Use a conventional vacuum pump if it is equipped with a check valve. If it has no check valve, purchase and attach a vacuum pump adapter. |
| Leak detector | Yes | No | Leak detectors for CFC and HCFC that react to chlorine do not function because R410A contains no chlorine. Leak detectors for HFC134a can be used for R410A. |
| Flaring oil | Yes | No | For systems that use R22, apply mineral oil (Suniso oil) to the flare nuts on the tubing to prevent refrigerant leakage. For machines that use R407C or R410A, apply synthetic oil (ether oil) to the flare nuts. |

**Manifold gauge**

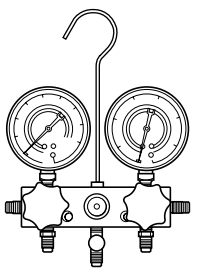

**Vacuum pump**

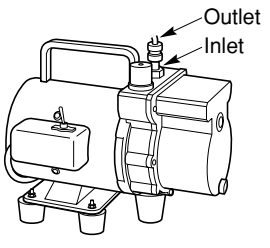


* Using tools for R22 and R407C and new tools for R410A together can cause defects.

3-2. Use R410A exclusive cylinder only.

**Single-outlet valve**

(with siphon tube)
Liquid refrigerant should be recharged with the cylinder standing on end as shown.

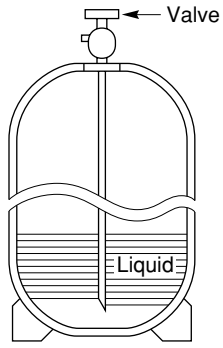

04-393 DC INV Tech p a-44 12/15/04 3:04 PM Page 6

# CONTENTS

Page

**IMPORTANT . . . . . 2**
Please Read Before Starting
Check of Density Limit
Precautions for Installation Using New Refrigerant

**1. GENERAL . . . . . 8**
1-1. Tools Required for Installation (not supplied)
1-2. Accessories Supplied with Unit
1-3. Type of Copper Tube and Insulation Material
1-4. Additional Materials Required for Installation
1-5. Tubing Size
1-6. Optional Distribution Joint Kits
1-7. Installing Distribution Joint Kit (for Twin & Double-Twin) (K70A056Z)
1-8. Installing Distribution Joint Kit (for Triple) (K70A061Z)

**2. SELECTING THE INSTALLATION SITE . . . . .17**
2-1. Indoor Unit
2-2. Outdoor Unit
2-3. Air Discharge Chamber for Top Discharge
2-4. Installing the Unit in Heavy Snow Areas
2-5. Precautions for Installation in Heavy Snow Areas
2-6. Dimensions of Snow / Wind-proof Ducting and Refrigerant Tubing Space of Installation

**3. HOW TO INSTALL THE INDOOR UNIT . . . . .20**

■ 4-Way Air Discharge Semi-Concealed Type (CAFP Type) . . . . . .20
3-1. Preparation for Suspending
3-2. Suspending the Indoor Unit
3-3. Placing the Unit Inside the Ceiling
3-4. Installing the Drain Piping
3-5. Checking the Drainage

■ Wall-Mounted Type (MAFP Type) . . . . . .24
3-6. Removing the Rear Panel from the Unit
3-7. Selecting and Making a Hole
3-8. Installing the Rear Panel onto the Wall
3-9. Removing the Grille to Install the Indoor Unit
3-10. Preparing the Tubing
3-11. Shaping the Tubing
3-12. Installing the Drain Hose

■ Ceiling-Mounted Type (SPAFP Type) . . . . . .28
3-13. Required Minimum Space for Installation and Service
3-14. Suspending the Indoor Unit
3-15. Duct for Fresh Air
3-16. Shaping the Tubing
3-17. Installing the Drain Piping

■ Concealed-Duct Type (DSAFP Type) . . . . . .35
3-18. Required Minimum Space for Installation and Service
3-19. Suspending the Indoor Unit
3-20. Installing the Drain Piping
3-21. Checking the Drainage
3-22. Increasing the Fan Speed

**4. HOW TO INSTALL THE OUTDOOR UNIT . . .40**
4-1. Installing the Outdoor Unit
4-2. Drainage Work
4-3. Routing the Tubing and Wiring

**5. ELECTRICAL WIRING . . . . . .41**
5-1. General Precautions on Wiring
5-2. Recommended Wire Length and Wire Diameter for Power Supply System
5-3. Wiring System Diagrams

**6. HOW TO INSTALL THE REMOTE CONTROLLER (OPTIONAL PART) . . . . . .45**
6-1. When Using a Wall Box for Flush Mounting
6-2. Basic Wiring Diagram (Twin, Triple, Double-Twin)
6-3. Wiring System Diagram for Group Control
6-4. Switching the Room Temperature Sensors
6-5. Connecting to a Ventilation Fan
6-6. Wiring the Remote Controller
6-7. Trouble Diagnostics

**7. HOW TO PROCESS TUBING . . . . . .53**
7-1. Connecting the Refrigerant Tubing
7-2. Connecting Tubing Between Indoor and Outdoor Units
7-3. Insulating the Refrigerant Tubing
7-4. Taping the Tubes
7-5. Finishing the Installation

**8. LEAK TEST, EVACUATION AND ADDITIONAL REFRIGERANT CHARGE . . . . . .57**

■ Air Purging with a Vacuum Pump (for Test Run) Preparation . . . . . 57
8-1. Leak Test
8-2. Evacuation
8-3. Charging Additional Refrigerant
8-4. Finishing the Job

**9. HOW TO INSTALL THE CEILING PANEL . . . .60**

■ 4-Way Air Discharge Semi-Concealed Type (CAFP Type) . . . . . 60
9-1. Before Installing the Ceiling Panel
9-2. Installing the Ceiling Panel
9-3. Wiring the Ceiling Panel
9-4. How to Attach the Corner & Air Intake Grille
9-5. Checking After Installation
9-6. When Removing the Ceiling Panel for Servicing
9-7. Adjusting the Auto Flap

04-393 DC INV Tech p a-44 12/15/04 3:04 PM Page 7

Page

**10.TEST RUN . . . . . .64**
10-1. Preparing for Test Run

■ CAFP, SPAFP, DSAFP Type . . . . . 65
10-2. Caution
10-3. Test Run Procedure
10-4. Items to Check Before the Test Run
10-5. Test Run Using the Remote Controller
10-6. Precautions
10-7. Table of Self-Diagnostic Functions and Corrections (CAFP, SPAFP, DSAFP, MAFP Type)
10-8. System Control

■ MAFP Type . . . . . 72
10-9. Caution
10-10. Test Run Procedure
10-11. Items to Check Before the Test Run
10-12. Preparation for Test Run
10-13. Test Run
10-14. Precautions
10-15. Table of Self-Diagnostic Functions and Corrections
10-16. System Control

■ CAFP, SPAFP, DSAFP Type (for Link Wiring) . 81
10-17. Caution
10-18. Test Run Procedure
10-19. Items to Check Before the Test Run
10-20. Test Run Using the Remote Controller
10-21. Table of Self-Diagnostic Functions and Corrections CAFP, SPAFP, DSAFP, MAFP Type
10-22. Automatic Address Setting

■ MAFP Type (for Link Wiring) . . . . . 90
10-23. Caution
10-24. Test Run Procedure
10-25. Table of Self-Diagnostic Functions and Corrections CAFP, SPAFP, DSAFP, MAFP Type
10-26. Automatic Address Setting
10-27. Caution for Pump Down

**11. HOW TO INSTALL THE WIRELESS REMOTE CONTROLLER RECEIVER . . . . . 99**

■ K70D037Z for 4-Way Cassette (CAFP Type) . . 99
11-1. Installing the Receiver Unit
11-2. Accessories
11-3. Wiring the Receiver Unit
11-4. Precautions on Simultaneous Installation of Wired Remote Controller and Wireless Remote Controller
11-5. How to Use the Test Run Setting

■ K70D040Z for Ceiling Mounted (SPAFP Type) 102
11-6. Installing the Receiver Unit
11-7. Accessories Supplied with Unit
11-8. Wiring the Receiver Unit
11-9. Precautions on Simultaneous Installation of Wired Remote Controller and Wireless Remote Controller
11-10. How to Use the Test Run Setting

■ K70D039Z for DSAFP Type . . . . . 105
11-11. Accessories Supplied with Separate Receiver Unit
11-12. Important Information for Installation of 1 Separate Receiver Unit
11-13. How to Install the Separate Receiver Unit
11-14. Wiring the Separate Receiver Unit
11-15. Important Information for Installation of 2 Separate Receiver Units
11-16. Test Run Setting

04-393 DC INV Tech p a-44 12/15/04 3:04 PM Page 8

# 1. GENERAL

This booklet briefly outlines where and how to install the air conditioning system. Please read over the entire set of instructions for the indoor and outdoor units and make sure all accessory parts listed are with the system before beginning.

### 1-1. Tools Required for Installation (not supplied)

1. Standard screwdriver
2. Phillips head screwdriver
3. Knife or wire stripper
4. Tape measure
5. Carpenter's level
6. Sabre saw or key hole saw
7. Hacksaw
8. Core bits
9. Hammer
10. Drill
11. Tube cutter
12. Tube flaring tool
13. Torque wrench
14. Adjustable wrench
15. Reamer (for deburring)

### 1-2. Accessories Supplied with Unit

See Tables 1-1 to 1-4.

| Table | Type |
|---|---|
| 1-1 | 4-Way Air Discharge Semi-Concealed |
| 1-2 | Wall-Mounted |
| 1-3 | Ceiling-Mounted |
| 1-4 | Concealed-Duct |

### 1-3. Type of Copper Tube and Insulation Material

If you wish to purchase these materials separately from a local source, you will need:

1. Deoxidized annealed copper tube for refrigerant tubing.
2. Foamed polyethylene insulation for copper tubes as required to precise length of tubing. Wall thickness of the insulation should be not less than 8 mm.
3. Use insulated copper wire for field wiring. Wire size varies with the total length of wiring. Refer to 5. Electrical Wiring for details.

**CAUTION**

**Check local electrical codes and regulations before obtaining wire. Also, check any specified instructions or limitations.**

### 1-4. Additional Materials Required for Installation

1. Refrigeration (armored) tape
2. Insulated staples or clamps for connecting wire (See your local codes.)
3. Putty
4. Refrigeration tubing lubricant
5. Clamps or saddles to secure refrigerant tubing
6. Scale for weighing

**Table 1-1 (4-Way Air Discharge Semi-Concealed)**

| Part Name | Figure | Q'ty | Remarks |
|---|---|---|---|
| Full-scale installation diagram |  | 1 | Printed on container box |
| Flare insulator |  | 2 | For wide and narrow tubes |
| Insulating tape |  (White) | 2 | For wide and narrow tube flare nuts |
| Hose band |  | 1 | For securing drain hose |
| Packing |  | 1 | For drain joint |
| Drain insulator |  | 1 | For drain joint |
| Drain hose | 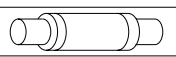 | 1 | For securing drain hose |
| Washer |  | 8 | For suspension bolts |
| Screw |  | 4 | For full-scale installation diagram |

**Table 1-2 (Wall-Mounted)**

| Part Name | Figure | Q'ty | Remarks |
|---|---|---|---|
| Plastic cover |  | 1 | For improved tubing appearance |
| Tapping screw | Truss-head Phillips 4 × 16 mm  | 10 | For fixing the rear panel |
| Insulator |  | 1 | For insulating flare nut (255 type only) |

**Table 1-3 (Ceiling-Mounted)**

| Part Name | Figure | Q'ty | Remarks |
|---|---|---|---|
| Special washer |  | 4 | For temporarily suspending indoor unit from ceiling |
| Drain insulator | 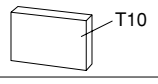 T10 | 1 | For drain hose joint |
| Flare insulator | T5 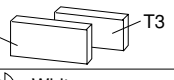 T3 | 2 sets | For wide and narrow tube joints |
| Insulating tape |  White (heat-resisting) | 2 | For wide and narrow flare joints |
| Vinyl clamp |  | 8 | For flare and drain insulator |
| Eyelet |  | 1 | For power supply inlet |
| Full-scale installation diagram | 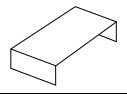 | 1 | Printed on container box |
| Drain hose | 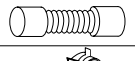 L140 | 1 | For main unit + PVC pipe joints |
| Hose band |  | 2 | For drain hose connection |

**Table 1-4 (Concealed-Duct)**

| Part Name | Figure | Q'ty | Remarks |
|---|---|---|---|
| Washer |  | 8 | For suspending indoor unit from ceiling |
| Flare insulator |  | 2 | For wide and narrow tubes |
| Insulating tape |  | 2 | For wide and narrow tubes flare nuts |
| Drain insulator |  | 1 | For drain hose joint |
| Hose band |  | 1 | For securing drain hose |
| Packing |  | 1 | For drain joint |
| Drain hose | 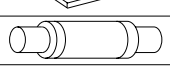 | 1 | |
| Sealing putty |  | 1 | For sealing recessed portion of power supply |
| Vinyl clamp | 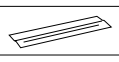 | 8 | For flare and drain insulators |
| Booster cable* | 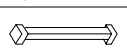 | 1 | Connector for changeover to HT tap. |

* Booster cable is housed inside the electrical component box.

- Use 3/8" for suspension bolts.
- Field supply for suspending bolts and nuts.

## 1-5. Tubing Size

(A) Single type

- Refrigerant tubing between the indoor and outdoor units shall be kept as short as possible.
- The length of the refrigerant tubes between the indoor and outdoor units are limited by the elevation difference between the 2 units. During tubing work, try to make both the tubing length (L) and the difference in elevation (H1) as short as possible. Refer to Table 1-5.

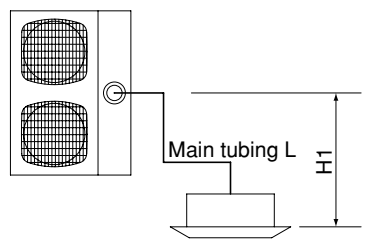


**Table 1-5**

| Outdoor unit type | 25, 36 types | 48 types |
|---|---|---|
| Maximum allowable tubing length | 50 m | 50 m |
| Charge-less tubing length (actual length) | 3 – 30 m | 5 – 30 m |
| Additional charge per 1 m | 40g | |

(B) Simultaneous operation multi (Twin, Triple, Double-Twin)

**NOTE** **Because the indoor units run simultaneously, install them within the same room.**

| Item | | | Contents | Symbol | | | | Actual length (m) |
|---|---|---|---|---|---|---|---|---|
| | | | | Single | Twin | Triple | Double-Twin | |
| Allowable tubing lengths | Maximum allowable tubing length | | One-way length of tubing from outdoor unit to the most distant indoor unit | L | L + ℓ1<br>L + ℓ2 | L + ℓ1, L + ℓ2<br>L + ℓ3 | L + L1 + ℓ1, L + L1 + ℓ2<br>L + L2 + ℓ3, L + L2 + ℓ4 | ≤ 50 |
| | Maximum distribution tubing length | | Maximum length following the first branch point (No. 1 distribution) | – | ℓ1, ℓ2 | ℓ1, ℓ2, ℓ3 | L1 + ℓ1, L1 + ℓ2<br>L2 + ℓ3, L2 + ℓ4 | ≤ 15 |
| Maximum branch tubing length | | | Difference between the maximum length and minimum length in tubing following the first branch point | – | ℓ1 > ℓ2<br>ℓ1 – ℓ2 | ℓ1 > ℓ2 > ℓ3<br>ℓ1 – ℓ2<br>ℓ1 – ℓ3<br>ℓ2 – ℓ3 | Max.: L2 + ℓ4<br>Min.: L1 + ℓ1<br>(L2 + ℓ4) – (L1+ ℓ1) | ≤ 10 |
| Maximum difference between lengths of No. 1 distribution tubing (double twin) | | | | – | – | – | L2 > L1<br>L2 – L1 | ≤ 10 |
| Maximum difference between lengths of No. 2 distribution tubing (double twin) | | | | – | – | – | ℓ2 > ℓ1<br>ℓ4 > ℓ3<br>ℓ2 – ℓ1<br>ℓ4 – ℓ3 | ≤ 10 |
| Maximum allowable height difference | Maximum indoor-outdoor height difference | If outdoor unit is higher | | H1 | | | | ≤ 30 |
| | | If outdoor unit is lower | | H1 | | | | ≤ 15 |
| | Maximum height difference between indoor units | | | – | H2 | H2, H3, H4 | H2, H3, H4, H5, H6, H7 | ≤ 0.5 |

* For connection tubing sizes, refer to table above.

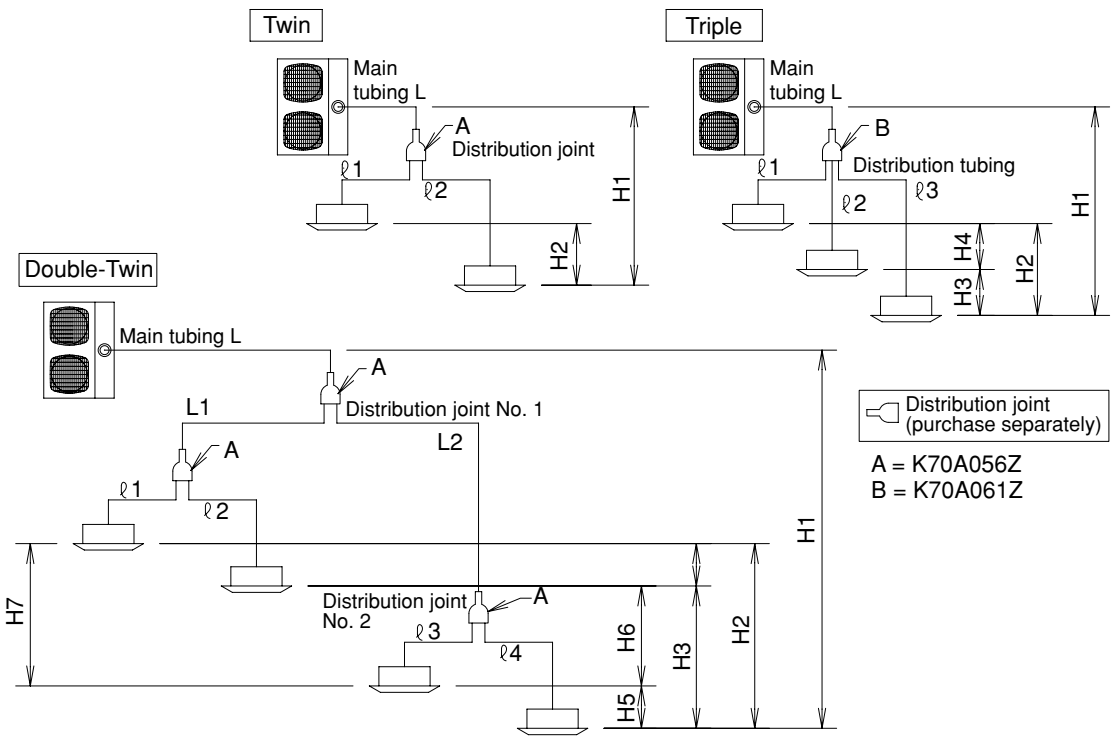


**NOTE**

- For refrigerant tube branches, use the optional distribution joints.
- For cautions on the use of the optional distribution joints, be sure to refer to the provided instruction sheet. Also, be careful to install them in the correct direction (orientation).

**Table 1-6 Tubing Data for Models (Single, Twin, Triple, Double-Twin)**

| Tubing Data \ Models | | GRFP255L GRFP255R | GRFP365L GRFP365R | GRFP485L GRFP485R |
|---|---|---|---|---|
| Tubing size outer diameter | Narrow tube mm (in.) | 9.52 (3/8) | 9.52 (3/8) | 9.52 (3/8) |
| | Wide tube mm (in.) | 15.88 (5/8) | 15.88 (5/8) | 15.88 (5/8) |
| Limit of tubing length (m) | | 50 | 50 | 50 |
| Limit of elevation difference between the 2 units | Outdoor unit is placed higher (m) | 30 | 30 | 30 |
| | Outdoor unit is placed lower (m) | 15 | 15 | 15 |
| Max. allowable tubing length at shipment (m) | | 3 – 30 | 3 – 30 | 5 – 30 |
| Required additional refrigerant *1 (g/m) | | a) 40 | b) 40 | b) 40 |
| Refrigerant charged at shipment (kg) | | 1.2 | 1.2 | 1.2 |

No additional charge of compressor oil is necessary.
*1 If total tubing length becomes 30 to 50 m, charge additional refrigerant by 40 g/m.

**Table 1-7 List of Connection Tube Sizes**

| | Main tubing (L) | Double-Twin distribution tube (L1, L2) Total type capacity of indoor units connected after the branch | Indoor unit connection tube ( ℓ1, ℓ2, ℓ3, ℓ4) | |
|---|---|---|---|---|
| Type capacity of indoor units | 25 – 48 | 25 | 25 – 48 | 12 – 18 |
| Wide tube | ϕ15.88 | ϕ15.88 | ϕ15.88 | ϕ12.7 |
| Narrow tube | ϕ9.52 | ϕ9.52 | ϕ9.52 | ϕ6.35 |
| Amount of additional charge per 1 m | 40 g | 40 g | 40 g | 20 g |

Charge with an amount of additional refrigerant calculated using the formula below, based on the values in Table 1-7 and the size and length of the liquid (narrow) tubing.

**Amount of additional refrigerant charge (g)**

Do not remove refrigerant from the system, even if the result of the calculation is negative. (Use with the current refrigerant charge.)

Additional refrigerant amount (g) = Additional refrigerant for main tubing (g) + Additional refrigerant for distribution tubing (g) – Outdoor unit charge-less refrigerant amount (g)
= 40X (a) + 40X (b) + 20X (c) – 1200 (25, 36 and 48)

(a) Actual length (m) of main tubing (ϕ9.52) — Refrigerant charge per 1 m of actual length = 40 g/m (25, 36 and 48)
(b) Total length of distribution tubing (ϕ9.52) — Refrigerant charge per 1 m of actual length = 40 g/m
(c) Total length of distribution tubing (ϕ6.35) — Refrigerant charge per 1 m of actual length = 20 g/m

**Example**

- Sample tubing lengths
  L = 35 m ℓ 1 = 5 m
  L1 = 10 m ℓ 2 = 5 m
  L2 = 5 m ℓ 3 = 5 m
  ℓ 4 = 10 m

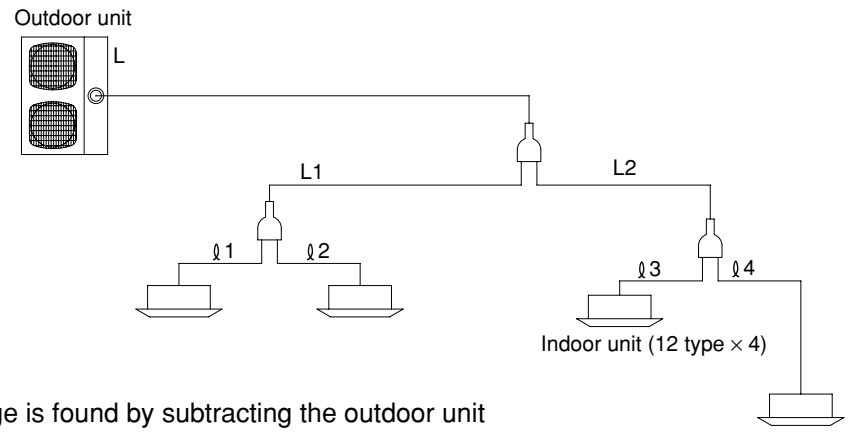


- Find the liquid (narrow) tube size from Table 1-7.
  L : ϕ9.52 (48 type)
  L1 : ϕ9.52 (Total type capacity of indoor units 25)
  L2 : ϕ9.52 (Total type capacity of indoor units 25)
  ℓ 1 – ℓ 4 : ϕ6.35
- The amount of additional on-site refrigerant charge is found by subtracting the outdoor unit charge-less refrigerant amount from the total charge amount for all tube sizes.
  ϕ9.52 → L : 35 m × 40 g / m = 1400
  ϕ9.52 → L1 + L2 : (10 + 5) m × 40 g / m = 600
  ϕ6.35 → ℓ 1 – ℓ 4 : (5 + 5 + 5 + 10) m × 20 g / m = 500
  Outdoor unit charge-less refrigerant amount –1200
  Total +1300
- The amount of additional on-site refrigerant charge is 1,300 g.

**CAUTION**

**1. This unit requires no additional refrigerant charge up to tubing length 30 m. In case of more than 30 m, additional refrigerant charge is required. Refer to Tables 1-6 and 1-7.**

**2. In case of multi type installation, indoor units should be installed within the same room. If multi type indoor units are installed in different rooms, temperature control may develop problems because thermostat operation must follow the thermostat condition of 1 indoor unit only (the main unit).**

**WARNING**

**Always check the gas density for the room in which the unit is installed.**

### ■ Check of limit density

When installing an air conditioner in a room, it is necessary to ensure that even if the refrigerant gas accidentally escapes, its density does not exceed the limit level. If the density might exceed the limit level, it is necessary to set up an opening between it and the adjacent room, or to install mechanical ventilation which is interlocked with the leak detector.

$$\frac{\textbf{(Total refrigerant charged amount : kg)}}{\textbf{(Min indoor volume where the indoor unit is installed : m}^3\textbf{)}} \leq \textbf{Limit density 0.3 (kg/m}^3\textbf{)}$$

The limit density of refrigerant which is used in this unit is 0.3 kg/m$^3$ (ISO 5149).

The shipped outdoor unit comes charged with the amount of refrigerant fixed for each type; so add it to the amount that is charged at the field. (For the refrigerant charge amount at shipment, refer to the unit's nameplate.)

**Minimum indoor volume & floor area relative to the amount of refrigerant is roughly as given in the following table.**

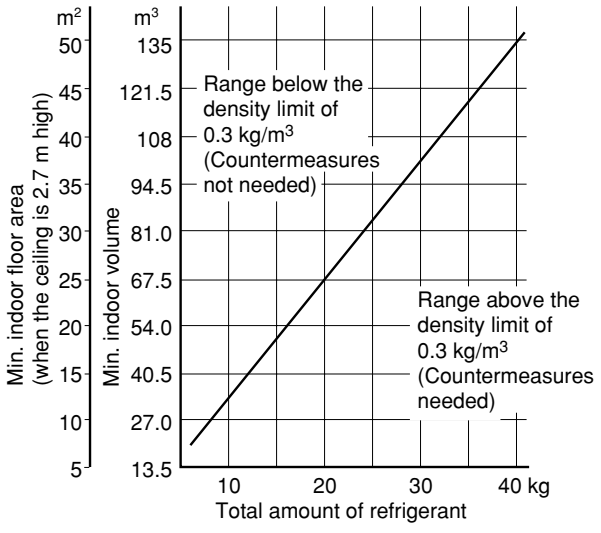


**CAUTION**

**Pay special attention to any location, such as a basement or recessed area, etc. where leaked refrigerant can collect, since refrigerant gas is heavier than air.**

### 1-6. Optional Distribution Joint Kits

- K70A056Z : Cooling capacity after distribution is 16.0 kW (54,600 BTU/h) or less
- K70A061Z : Cooling capacity after distribution is 28.0 kW (95,500 BTU/h) or less

**Table 1-8 Distribution Branch Size (ø1, ø2, ø3, ø4)**

Unit: mm (in.)

| Indoor Unit | 12 type | 16 type | 18 type | 25 type | 36 type | 48 type |
|---|---|---|---|---|---|---|
| Wide tube | 12.7 (1/2) | | | 15.88 (5/8) | | |
| Narrow tube | 6.53 (1/4) | | | 9.52 (3/8) | | |

**K70A056Z**

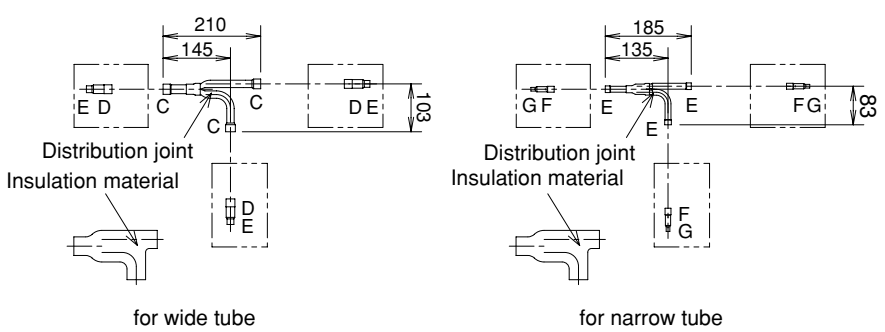


**Table 1-9 Dimensions of connections** (inner diameter of tubing)

Unit: mm

| Position | A | B | C | D | E | F | G |
|---|---|---|---|---|---|---|---|
| Size | ø 28.58 | ø 25.4 | ø 19.05 | ø 15.88 | ø 12.7 | ø 9.52 | ø 6.35 |

**K70A061Z (for simultaneous Triple)**

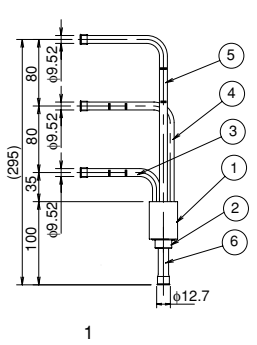


1

Narrow distribution joint for narrow tube

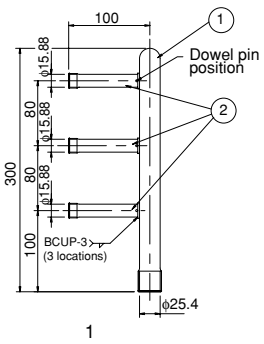


1

Wide distribution joint for wide tube

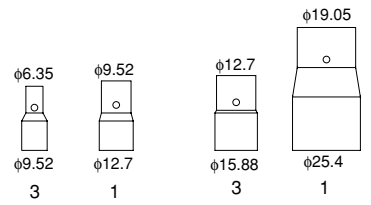


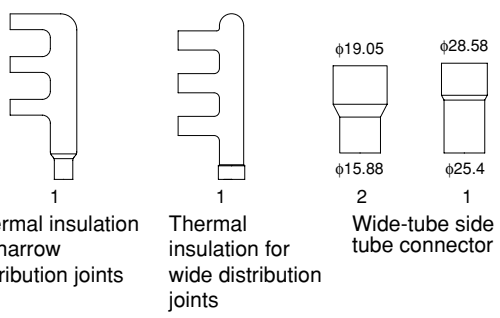

## 1-7. Installing Distribution Joint Kit (for Twin & Double-Twin) (K70A056Z)

- Use a tube cutter and cut at the size position that corresponds to the field-supply tube size selected based on the total indoor unit capacity. (If the size is the same as the tube end size, cutting is not necessary.)
- If the reducer that was supplied in the package is used, perform brazing on-site.

  Note: Do not cut in such a way that applies excessive force and causes deformation of the tube. (This will prevent insertion of the connecting tube.)
  For size selection, refer to “Information for the Person in Charge of Installation” and other materials that were supplied with the outdoor unit.
- Cut at a position that is as far away as possible from the dowel pin.
- After cutting the tube, be sure to remove any burrs and to finish the end surface correctly.
  (If there is excessive crushing or indentation of the tube, use a tube expander to expand it.)
- Check that there is no dirt or other foreign substance inside the distribution tubing.
- Install the distribution tubing so that it is either horizontal or vertical.
- Use the supplied thermal insulation to insulate the distribution tubing.
  (If other insulation is used, be sure to use insulation that can withstand temperatures of at least 120°C.)
- For details, refer to “Information for the Person in Charge of Installation.”

**Nitrogen gas replacement required for tube brazing**

If nitrogen replacement is not done when brazing is performed on the indoor unit and outdoor unit refrigerant tubing, oxide scale will occur. This scale will clog the solenoid valves, strainers, and other parts, leading to malfunction.

Therefore be sure to replace the air in the tubing with nitrogen when performing brazing in order to prevent problems from oxide scale.

Cutting is only necessary for the welding dimensions at positions B, D, and F.

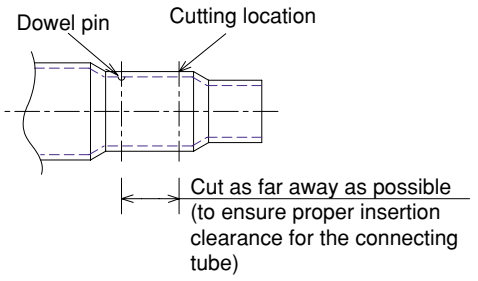


**Horizontal installation**

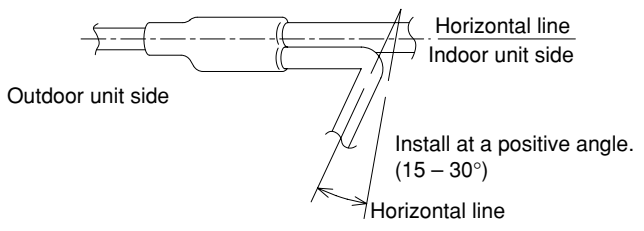


**Vertical installation (directed upward or downward)**

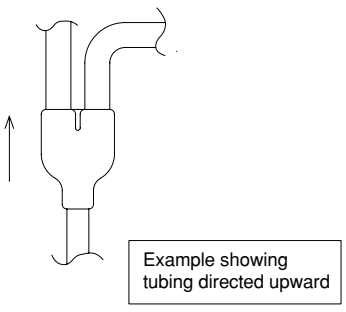

## 1-8. Installing Distribution Joint Kit (for Triple) (K70A061Z)

- Before installing, check the system combination.
- The 3 indoor units must be installed within the same room.
- To adjust the tube sizes of the distribution joints, use the supplied tube connectors.

### How to Install Distribution Joints

Use the supplied distribution joints to complete refrigerant tubing work.
Install distribution joints so that the tubes are horizontal after the branch point.

### Orientation of distribution joints

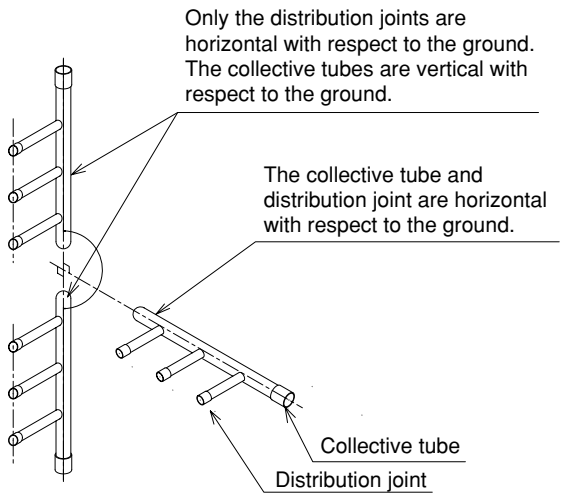


<Wide tube side>

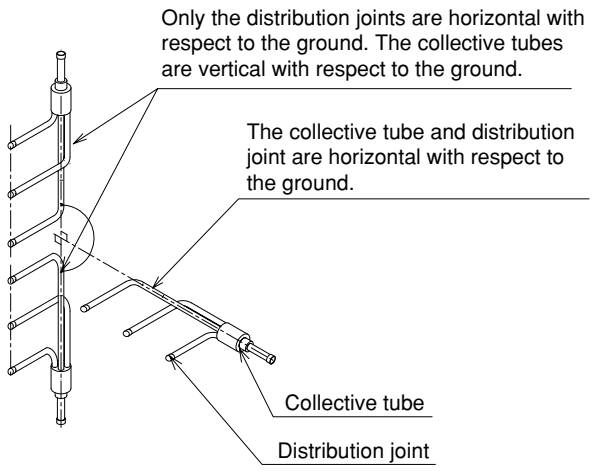


<Narrow tube side>

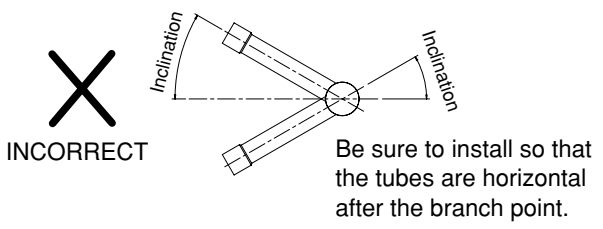


### Length requirement for strainer on main distribution tube side

Attach a straight tube 500 mm or longer to the main tubing side of the distribution joint (for both narrow and wide tubing).

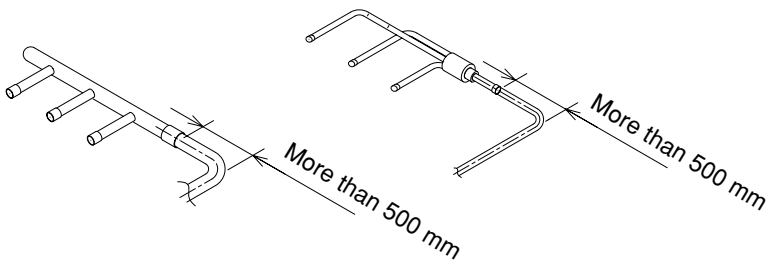


### Tubing insulation

Be sure to apply thermal insulation to both the narrow and wide tubing.
Depending on the conditions inside the ceiling, condensation may form on the insulation material. If high temperatures and high humidity are expected to occur inside the ceiling, add glass wool (16 – 20 kg/m$^3$, with a thickness of 10 mm or more) to the below insulation materials and apply sufficient thermal insulation.

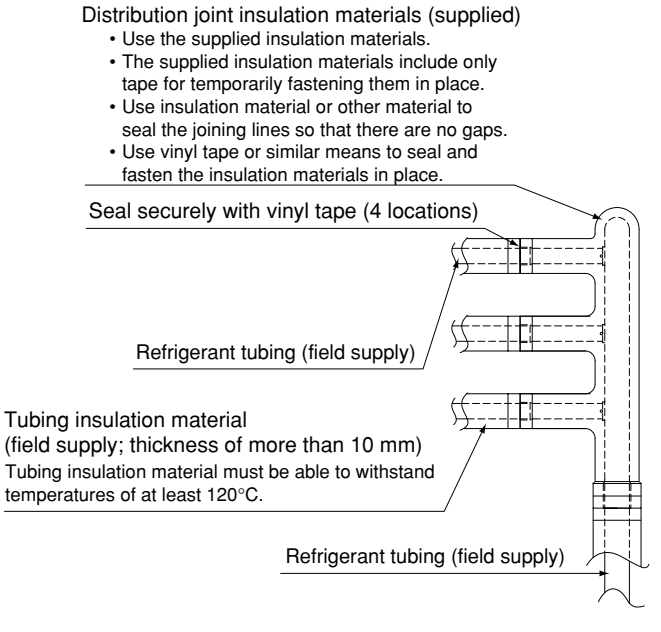

## 2. SELECTING THE INSTALLATION SITE

### 2-1. Indoor Unit

**AVOID:**

- areas where leakage of flammable gas may be expected.
- places where large amounts of oil mist exist.
- direct sunlight.
- locations near heat sources which may affect the performance of the unit.
- locations where external air may enter the room directly. This may cause “sweating” on the air discharge ports, causing them to spray or drip.
- locations where the remote controller will be splashed with water or affected by dampness or humidity.
- installing the remote controller behind curtains or furniture.
- locations where high-frequency emissions are generated.

**DO:**

- select an appropriate position from which every corner of the room can be uniformly cooled.
- select a location where the ceiling is strong enough to support the weight of the unit.
- select a location where tubing and drain pipe have the shortest run to the outdoor unit.
- allow room for operation and maintenance as well as unrestricted air flow around the unit.
- install the unit within the maximum elevation difference above or below the outdoor unit and within a total tubing length (L) from the outdoor unit as detailed in Tables 1-5 and 1-6.
- allow room for mounting the remote controller about 1m off the floor, in an area that is not in direct sunlight nor in the flow of cool air from the indoor unit.

**Ceiling-Mounted Type**

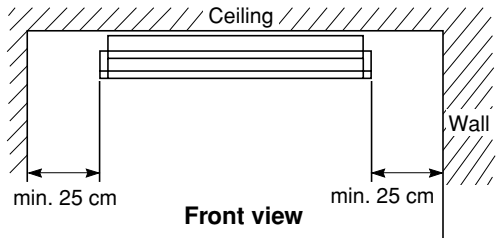


**NOTE**

The rear of the indoor unit can be installed flush against the wall.

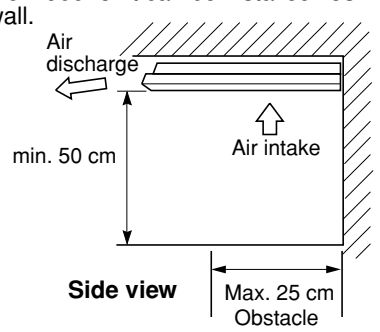


**Fig. 2-1**

**Concealed-Duct Type**
**4-Way Semi-Concealed Type**

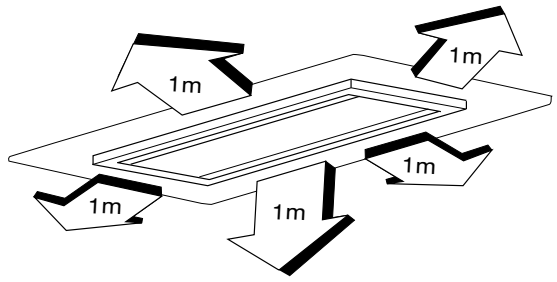


**Fig. 2-2**

**Wall-Mounted Type**

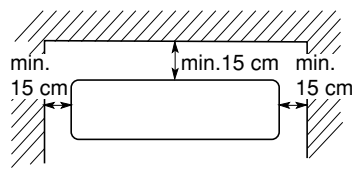


**Front View**

**Fig. 2-3**

## 2-2. Outdoor Unit

**AVOID:**

- heat sources, exhaust fans, etc. (Fig. 2-4)
- damp, humid or uneven locations

**DO:**

- choose a place as cool as possible.
- choose a place that is well ventilated and outside air temperature does not exceed maximum 45°C constantly.
- allow enough room around the unit for air intake/exhaust and possible maintenance. (Fig. 2-5)
- use lag bolts or equal to bolt down unit, reducing vibration and noise.

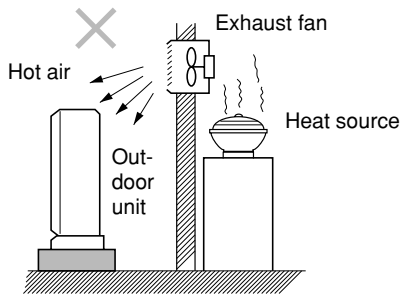


**Fig. 2-4**

**Installation space**

Distance between obstructions and the unit air inlet and outlet must be as shown below.

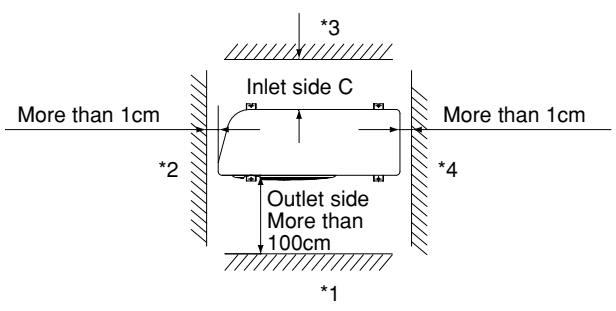


**Fig. 2-5**

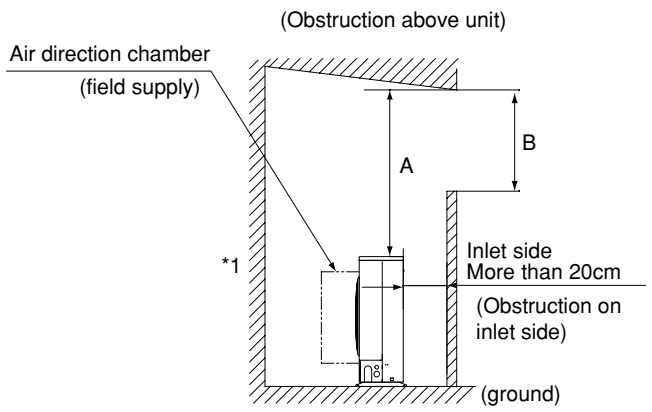


**Fig. 2-6**

**CAUTION**

- Concerning inlet-side distance “C” (Fig. 2-5)
  The minimum for distance “C” is 15 cm if there are no obstructions on the outlet side (wall *1 side) and *2 or *4 is not present. In all other cases, the minimum for distance “C” is 20 cm.
- If the unit is installed with the outlet side facing wall *1, then there must be no obstructions on 2 of the remaining 3 sides: *2, *3, *4.
- If wall *1 is on the outlet side (Fig. 2-5), or if obstructions are present on all 3 sides *2, *3, and *4 (Fig. 2-5), then the minimum distance for “A” and “B” is 2 m (Fig. 2-7). Even if there is no wall on the outlet side, a minimum of 100 cm is required.

**In case of multiple installations**

- provide a solid base (concrete block, 10 × 40 cm beams or equal), a minimum of 15 cm above ground level to reduce humidity and protect the unit against possible water damage and decreased service life. (Fig. 2-7)
- use lag bolts or equal to bolt down unit, reducing vibration and noise.

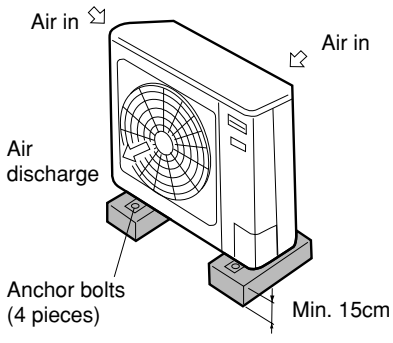


**Fig. 2-7**

### 2-3. Air Discharge Chamber for Top Discharge

Be sure to install the air discharge chamber in the field when:

- it is difficult to keep a space of min. 50 cm between the air discharge outlet and the obstacle.
- the air discharge outlet is facing to the sidewalk and discharged hot air annoys the passers-by. Refer to Fig. 2-8.

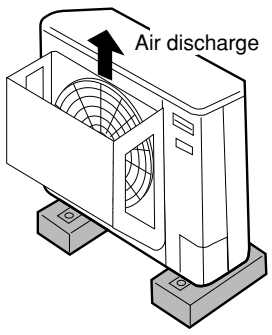


**Fig. 2-8**

### 2-4. Installing the Unit in Heavy Snow Areas

In locations with strong wind, snow-proof ducting should likewise be fitted and direct exposure to the wind should be avoided as much as possible.

**■ Countermeasures against snow and wind**

In regions with snow and strong wind, the following problems may occur when the outdoor unit is not provided with a platform and snow-proof ducting:

a) The outdoor fan may not run and damage of the unit may be caused.
b) There may be no air flow.
c) The tubing may freeze and burst.
d) The condenser pressure may drop because of strong wind, and the indoor unit may freeze.

In regions with significant snowfall, the outdoor unit should be provided with a platform and snow-proof duct.

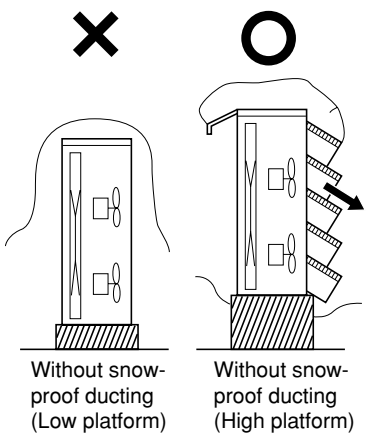


**Fig. 2-9**

### 2-5. Precautions for Installation in Heavy Snow Areas

(1) The platform should be higher than the max. snow depth. (Fig. 2-9)
(2) The 2 anchoring feet of the outdoor unit should be used for the platform, and the platform should be installed beneath the air intake side of outdoor unit.
(3) The platform foundation must be firm and the unit must be secured with anchor bolts.
(4) In case of installation on a roof subject to strong wind, countermeasures must be taken to prevent the unit from being blown over.

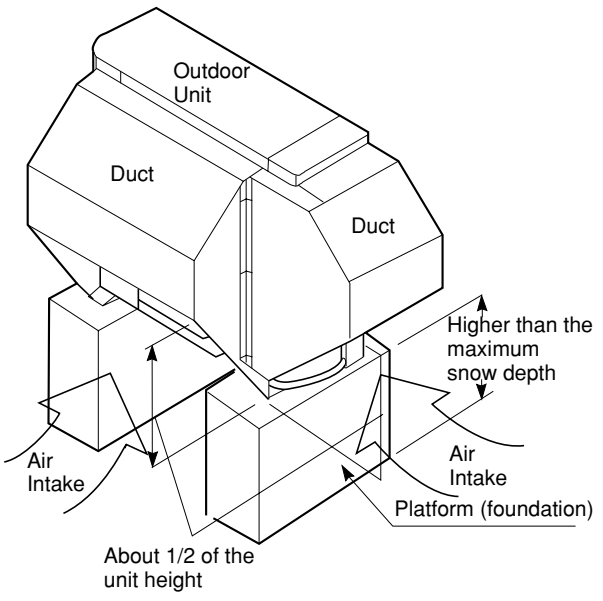


**Fig. 2-10**

### 2-6. Dimensions of Snow / Wind-proof Ducting and Refrigerant Tubing Space for Installation

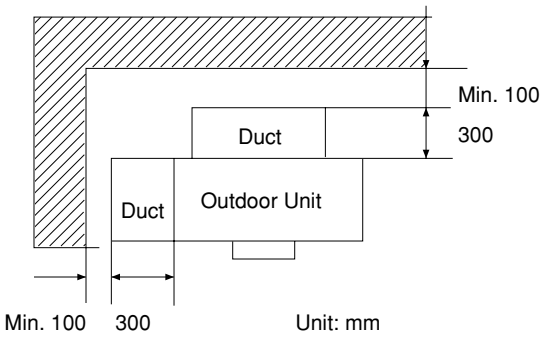


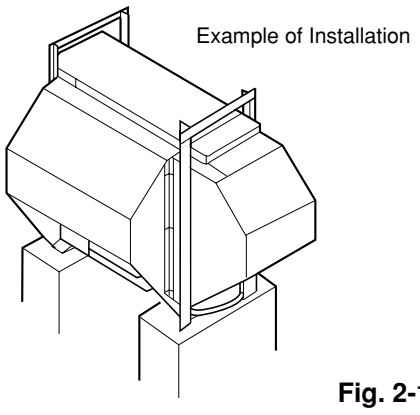


**Fig. 2-11**

# 3. HOW TO INSTALL THE INDOOR UNIT

## ■ 4-Way Air Discharge Semi-Concealed Type (CAFP Type)

### 3-1. Preparation for Suspending

This unit uses a drain pump. Use a carpenter's level to check that the unit is level.

### 3-2. Suspending the Indoor Unit

(1) Fix the suspension bolts securely to the ceiling using the method shown in the diagrams (Figs. 3-1 and 3-2), by attaching them to the ceiling support structure, or by any other method that ensures that the unit will be securely and safely suspended.

(2) Follow Fig. 3-2 and Table 3-1 to make the holes in the ceiling.



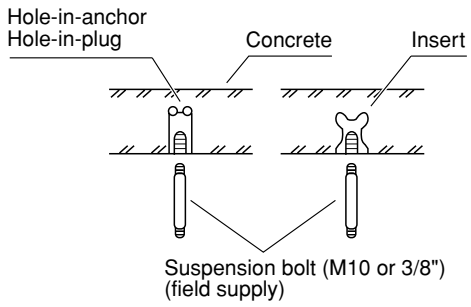


**Fig. 3-1**

**Table 3-1** Unit: mm

| Type \ Length | A | B | C | D |
|---|---|---|---|---|
| **12, 16, 18, 25, 36, 48** | 788 | 723 | 885 | 885 |

(3) Determine the pitch of the suspension bolts using the supplied full-scale installation diagram. The diagram and table (Fig. 3-3 and Table 3-2) show the relationship between the positions of the suspension fitting, the unit, and the panel.

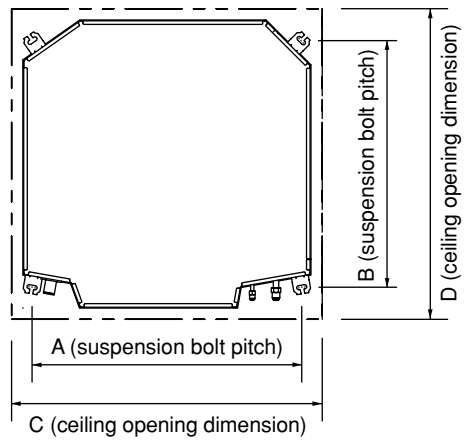


**Fig. 3-2**

**Table 3-2** Unit: mm

| Type \ Length | A | B | C | D | E |
|---|---|---|---|---|---|
| **12, 16, 18, 25** | 113 | 173 | 256 | 210 | 88 |
| **36, 48** | 113 | 173 | 319 | 210 | 88 |

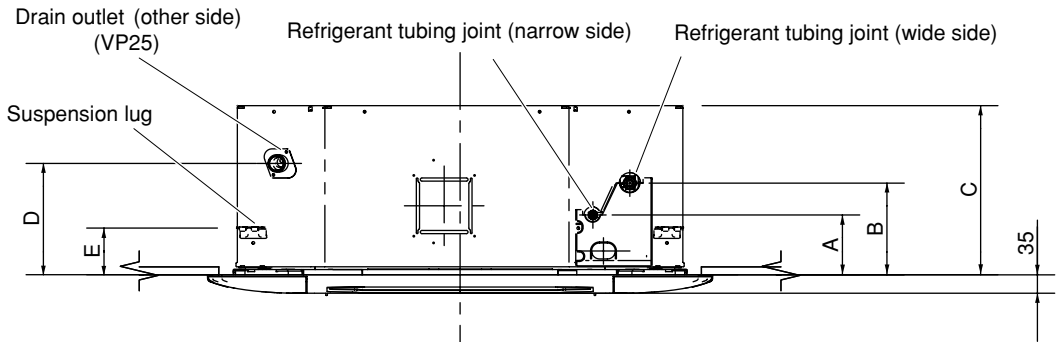


**Fig. 3-3**

### 3-3. Placing the Unit Inside the Ceiling

(1) When placing the unit inside the ceiling, determine the pitch of the suspension bolts using the supplied full-scale installation diagram. (Fig. 3-4)

Tubing and wiring must be laid inside the ceiling when suspending the unit. If the ceiling is already constructed, lay the tubing and wiring into position for connection to the unit before placing the unit inside the ceiling.

(2) The length of suspension bolts must be appropriate for a distance between the bottom of the bolt and the bottom of the unit of more than 15 mm as shown in Fig. 3-4.

(3) Thread the 3 hexagonal nuts and 2 washers (field supply) onto each of the 4 suspension bolts as shown in Fig. 3-5. Use 1 nut and 1 washer for the upper side, and 2 nuts and 1 washer for the lower side, so that the unit will not fall off the suspension lugs.

(4) Adjust so that the distance between the unit and the ceiling bottom is 12 to 17 mm. Tighten the nuts on the upper side and lower side of the suspension lug.

(5) Remove the protective polyethylene used to protect the fan parts during transport.

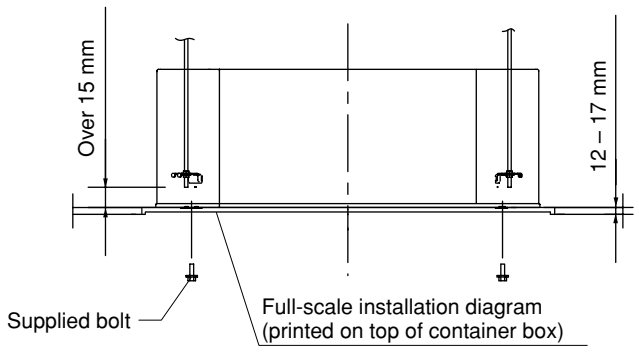


**Fig. 3-4**

CAFP

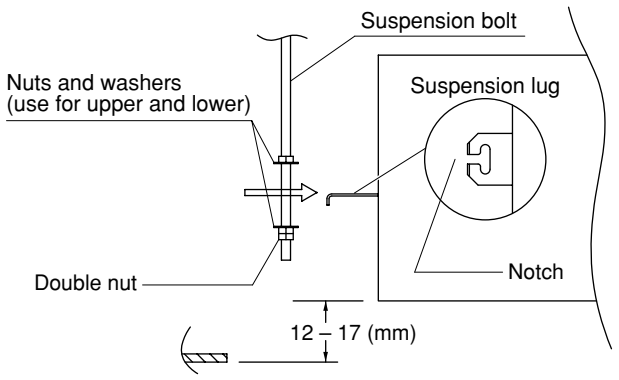


**Fig. 3-5**

### 3-4. Installing the Drain Piping

(1) Prepare a standard hard PVC pipe (O.D. 32 mm) for the drain and use the supplied drain hose and hose band to prevent water leaks.
The PVC pipe must be purchased separately. The unit's transparent drain port allows you to check drainage. (Fig. 3-6)

**CAUTION**

- **Insert the drain pipe until it contacts the socket as shown in Fig. 3-6, then secure it tightly with the hose band.**
- **Do not use adhesive when connecting the supplied hose.**

  Reasons: 1. It may cause water to leak from the connection. Since the connection is slippery just after the adhesive has been applied, the pipe easily slips off.
  2. The pipe cannot be removed when maintenance is needed.
- **Do not bend the supplied drain hose 90° or more. The hose may slip off.**
- **Align the hose bands with the end of the hose. Tighten the hose band firmly. Make sure that the bead is not covered by the hose band. (Fig. 3-6)**

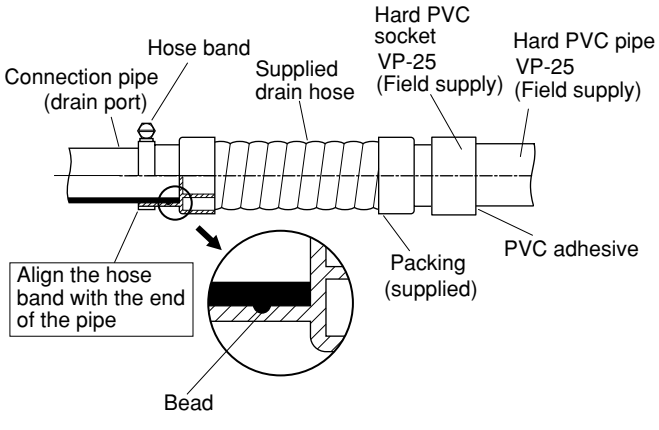


**Fig. 3-6**

(2) After checking the drainage, wrap the supplied packing and drain pipe insulator around the pipe. (Fig. 3-7)

**CAUTION**

**Tighten the hose clamps so their locking nuts face upward. (Fig. 3-6)**

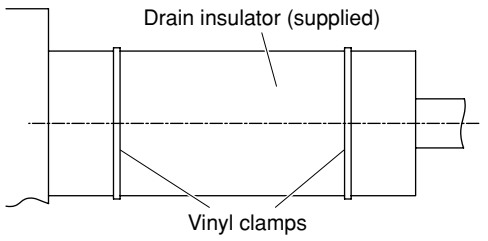


**Fig. 3-7**

**NOTE**

Make sure the drain pipe has a downward gradient (1/100 or more) and that there are no water traps.

**CAUTION**

- Do not install an air bleeder as this may cause water to spray from the drain pipe outlet. (Fig. 3-8)

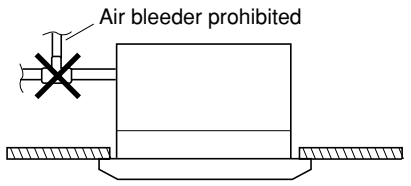


**Fig. 3-8**

**CAUTION**

- **If it is necessary to increase the height of the drain pipe, the section directly after the connection port can be raised a maximum of 64 cm. Do not raise it any higher than 64 cm, as this could result in water leaks. (Fig. 3-9)**
- **Do not install the pipe with an upward gradient from the connection port. This will cause the drain water to flow backward and leak when the unit is not operating. (Fig. 3-10)**
- **Do not apply force to the piping on the unit side when connecting the drain pipe. The pipe should not be allowed to hang unsupported from its connection to the unit. Fasten the pipe to a wall, frame, or other support as close to the unit as possible. (Fig. 3-11)**
- **Provide insulation for any pipes that are run indoors.**

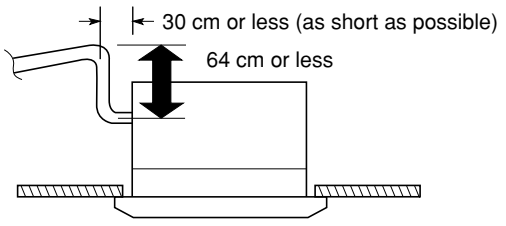


**Fig. 3-9**

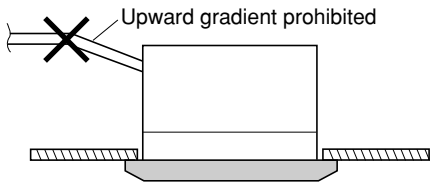


**Fig. 3-10**

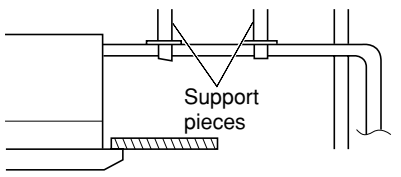


**Fig. 3-11**

### 3-5. Checking the Drainage

After wiring and drain piping are completed, use the following procedure to check that the water will drain smoothly. For this, prepare a bucket and wiping cloth to catch and wipe up spilled water.

(1) Connect power to the power terminal board (R, S terminals) inside the electrical component box.

(2) Slowly pour about 1,200 cc of water into the drain pan to check drainage. (Fig. 3-12)

(3) Short the check pin (CHK) on the indoor control board and operate the drain pump. Check the water flow through the transparent drain pipe and see if there is any leakage.

(4) When the check of drainage is complete, open the check pin (CHK) and remount the tube cover.

**CAUTION**

**Be careful since the fan will start when you short the pin on the indoor control board.**

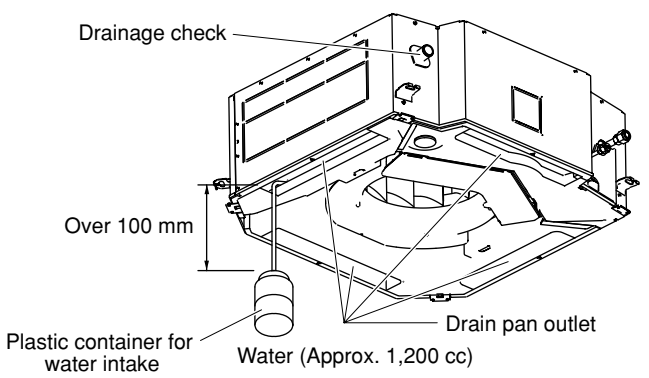


**Fig. 3-12**

CAFP

■ **Wall-Mounted Type (MAFP Type)**

### 3-6. Removing the Rear Panel from the Unit

(1) Remove the set screws used to fasten the rear panel to the indoor unit during transportation.

(2) Press up on the frame at the 2 locations shown by the arrows in the figure at right, and remove the rear panel.

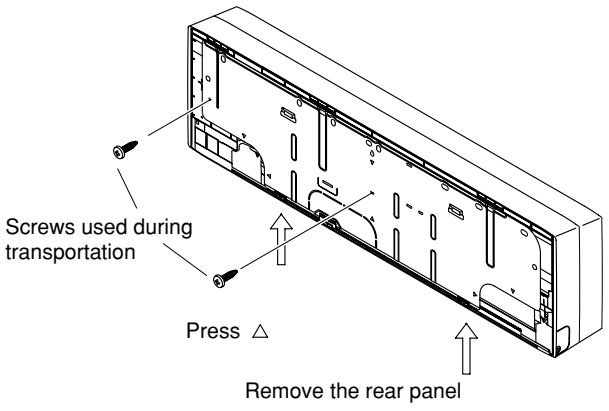


**Fig. 3-13**

**NOTE**

Tubing can be extended in 4 directions as shown in Fig. 3-14. Select the direction which will provide the shortest run to the outdoor unit.

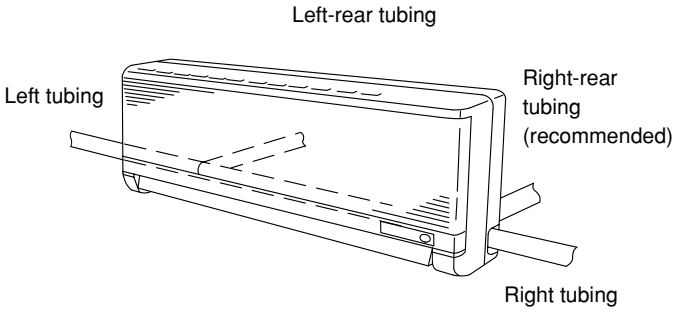


**Fig. 3-14**

### 3-7. Selecting and Making a Hole

(1) Remove the rear panel from the indoor unit and place it on the wall at the location selected. Fix the rear panel and hook the unit onto it temporarily. Make sure the unit is horizontal using a carpenter's level or tape measure to measure down from the ceiling.

(2) Determine which notch of the rear panel should be used. (Fig. 3-15)

(3) Before drilling a hole, check that there are no studs or pipes behind the determined location. The above precautions are also applicable if tubing goes through the wall in any other location.

(4) Using a sabre saw, key hole saw or hole-cutting drill attachment, make a hole (dia. 80 mm) in the wall. (Fig. 3-16)

(5) Measure the thickness of the wall from the inside edge to the outside edge and cut the PVC pipe at a slight angle 6 mm shorter than the thickness of the wall. (Fig. 3-17)

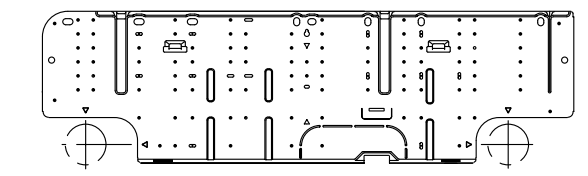


| Tubing hole diameter | ϕ80 |
|---|---|

**Fig. 3-15**

**CAUTION** **Avoid areas where electrical wiring or conduits are located.**

(6) Place the plastic cover over the end of the pipe (for indoor side only) and insert in the wall. (Fig. 3-18)

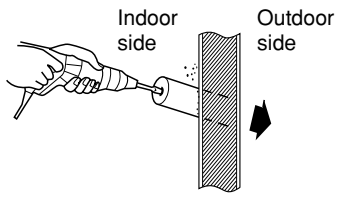


**Fig. 3-16**

**NOTE**

The hole should be made at a slight downward gradient to the outside.

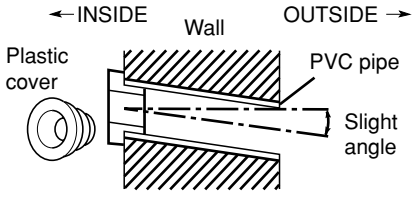


**Fig. 3-18**

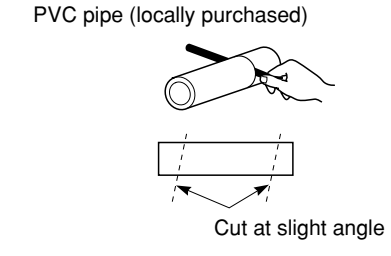


**Fig. 3-17**

### 3-8. Installing the Rear Panel onto the Wall

Confirm that the wall is strong enough to support the unit.

See either Item a) or b) below depending on the wall type.

**a) If the Wall is Wooden**

(1) Attach the rear panel to the wall with the 10 screws provided. (Fig. 3-19)
If you are not able to line up the holes in the rear panel with the beam locations marked on the wall, use Rawl plugs or toggle bolts to go through the holes on the panel or drill 5 mm dia. holes in the panel over the stud locations and then mount the rear panel.

(2) Check with a tape measure or carpenter's level. This is important so that the unit is correctly installed. (Fig. 3-20)

(3) Make sure the panel is flush against the wall. Any space between the wall and unit will cause noise and vibration.

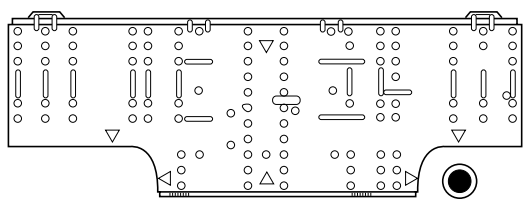

Fig. 3-19

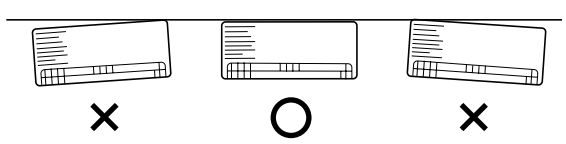

Fig. 3-20

**b) If the Wall is Brick, Concrete or Similar**

Drill 4.8 mm dia. holes in the wall. Insert Rawl plugs for appropriate mounting screws. (Fig. 3-21)

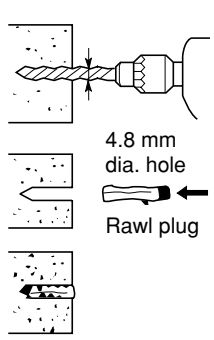


Fig. 3-21

### 3-9. Removing the Grille to Install the Indoor Unit

In principle, with this model wiring can be completed without removing the grille.
However, if it is necessary to change the settings on the PCB, follow the procedure below.

**Removing the grille**

(1) Lift up on both sides of the air-intake grille to open it. (Fig. 3-22)

(2) Remove the filter. (Fig. 3-22)

(3) Adjust the flap so that it is horizontal. (Fig. 3-23)

(4) Open the installation screw covers below the grille (3 locations). (Fig. 3-23)

(5) Remove the screws. (Fig. 3-23)

(6) Remove the grille. (Fig. 3-24)

**Attaching the grille**

(1) Close the flap.

(2) Keep the grille installation tabs aligned with the top portion of the grille, and reinstall the lower portion of the grille.
Fit the installation tabs into the grooves and press the lower portion of the grille back into its original position to install it.

(3) Press on the installation tabs to completely close the grille.
Check that the grille and frame are fitted tightly together.

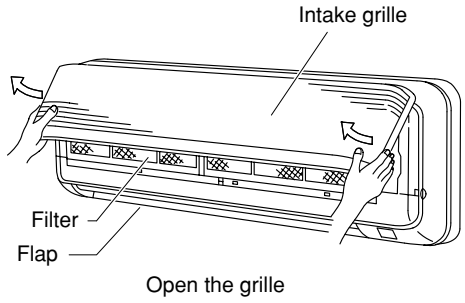


Open the grille

Fig. 3-22

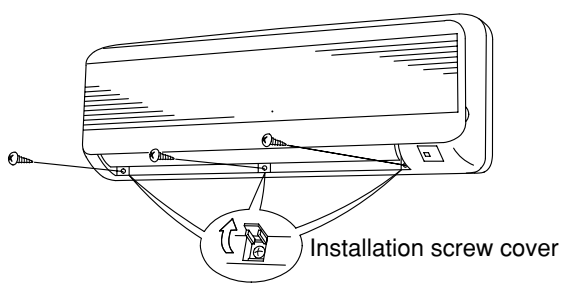


Fig. 3-23

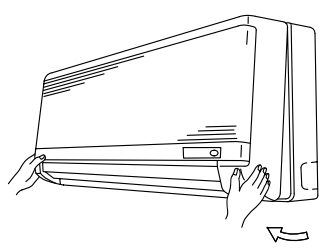

Remove the grille

Fig. 3-24

MAFP

### 3-10. Preparing the Tubing

(1) Arrangement of tubing by directions

a) Right or left tubing

The corner of the right or left frame should be cut with a hack saw or similar. (Fig. 3-25)

b) Right-rear or left-rear tubing

In this case, the corners of the frame do not need to be cut.

(2) Be sure to insulate the part of the drain hose that is run indoors, and the refrigerant tubing.
If these are not insulated, condensation may result in dripping and damage to walls and furniture.
The flare nuts on the 25-type (only) are large; therefore, use the supplied insulation material.

(3) To mount the indoor unit on the rear panel.

1. When installing the indoor unit, position the indoor unit onto the installation tabs on the upper part of the rear panel. (Fig. 3-26)
2. Press on the air outlet to hold it in place, and press the lower part of the indoor unit until a “click” sound is heard and the indoor unit is securely fastened to the installation tabs on the lower side of the rear panel. (Fig. 3-27)

Raising the clamp to lift up the indoor unit will facilitate this work. (Fig. 3-28)

To remove the indoor unit, press up on the 2 locations ( △ marks) on the lower part of the unit frame to disconnect the installation tabs. Refer to Section 3-6. “Removing the Rear Panel from the Unit (Fig. 3-13).”
Then lift up the indoor unit to remove it.

### 3-11. Shaping the Tubing

**Right-rear tubing**

(1) Shape the refrigerant tubing so that it can easily go into the hole. (Fig. 3-29)

(2) After performing a leak test, wrap both the refrigerant tubing and drain hose together with insulating tape.
The drain hose should be positioned below the refrigerant tubes, and should be given sufficient space so that no strong tension is applied to it.

(3) Push the wiring, refrigerant tubing and drain hose through the hole in the wall. Adjust the indoor unit so it is securely seated on the rear panel.

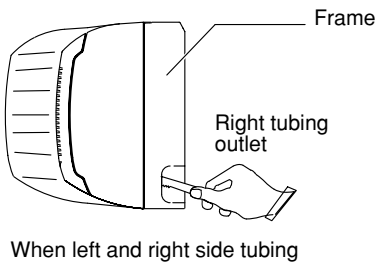


When left and right side tubing

**Fig. 3-25**

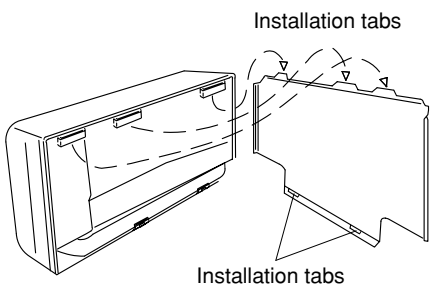


**Fig. 3-26**

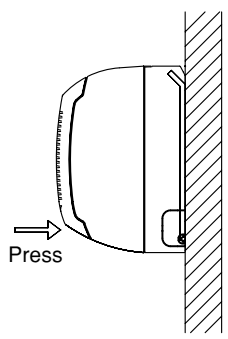


**Fig. 3-27**

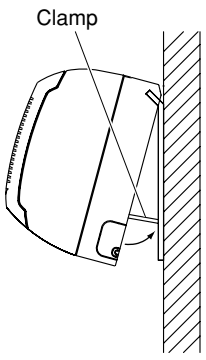


**Fig. 3-28**

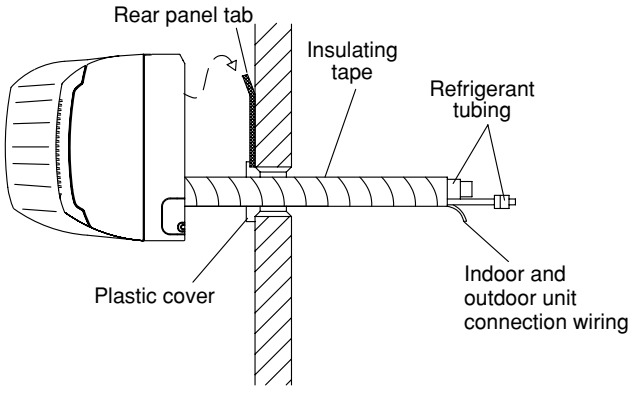


**Fig. 3-29**

**Left or left-rear tubing**

(1) Pass the tubing and drain hose into the rear of the indoor unit. Provide sufficient length for the connections to be made.
Next, bend the tubing with a pipe bender, and connect them.

(2) After performing a leak test, wrap the refrigerant tubing and drain hose together with insulating tape, as shown in the figure at right.
Then fit the tubing into the tubing storage space in the rear of the indoor unit and clamp in place.

(3) Adjust the indoor unit so that it is securely installed onto the rear panel.

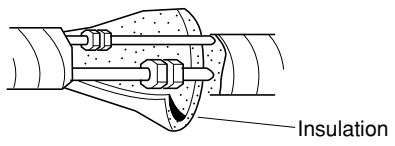


**Fig. 3-30**

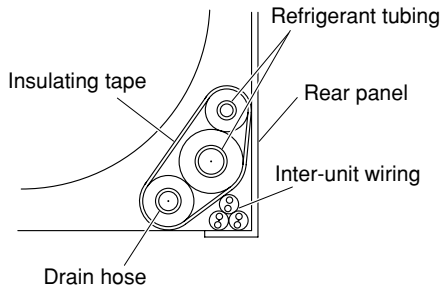


**Fig. 3-31**

### 3-12. Installing the Drain Hose

a) The drain hose should be slanted downward to the outside. (Fig. 3-32)

b) Never form a trap in the course of the hose.

c) If the drain hose will run in the room, insulate* the hose so that chilled condensation will not damage furniture or floors.

* Foamed polyethylene or its equivalent is recommended.

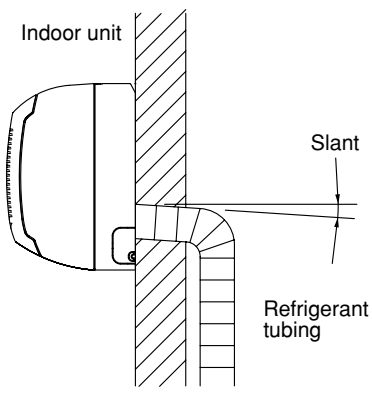


**Fig. 3-32**

**WARNING** **Do not supply power to the unit or operate it until all tubing and wiring to the outdoor unit are completed.**

## ■ Ceiling Mounted Type (SPAFP Type)

### 3-13. Required Minimum Space for Installation and Service

#### (1) Dimensions of suspension bolt pitch and unit

| Type \ Length | A | B | C |
|---|---|---|---|
| **12, 16, 18** | 855 | 910 | 210 |
| **25** | 1125 | 1180 | 210 |
| **36, 48** | 1540 | 1595 | 210 |

Unit: mm

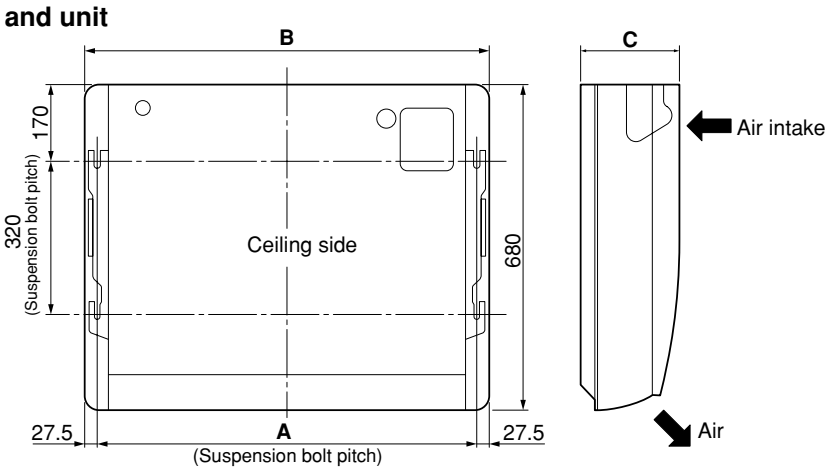


**Fig. 3-33**

#### (2) Refrigerant tubing • drain hose position

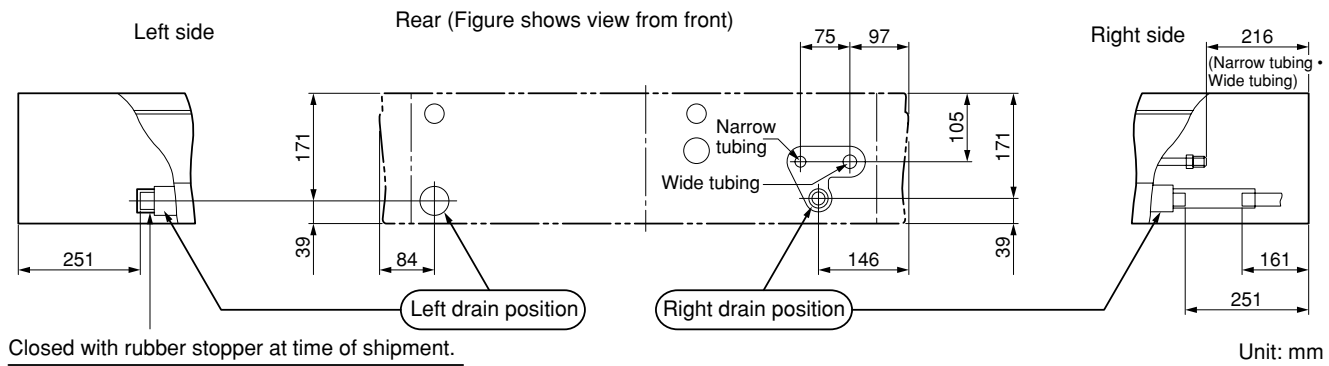


**Fig. 3-34**

#### (3) Unit opening position (Refrigerant tubing • drain hose • power inlet port • remote controller wiring inlet port)

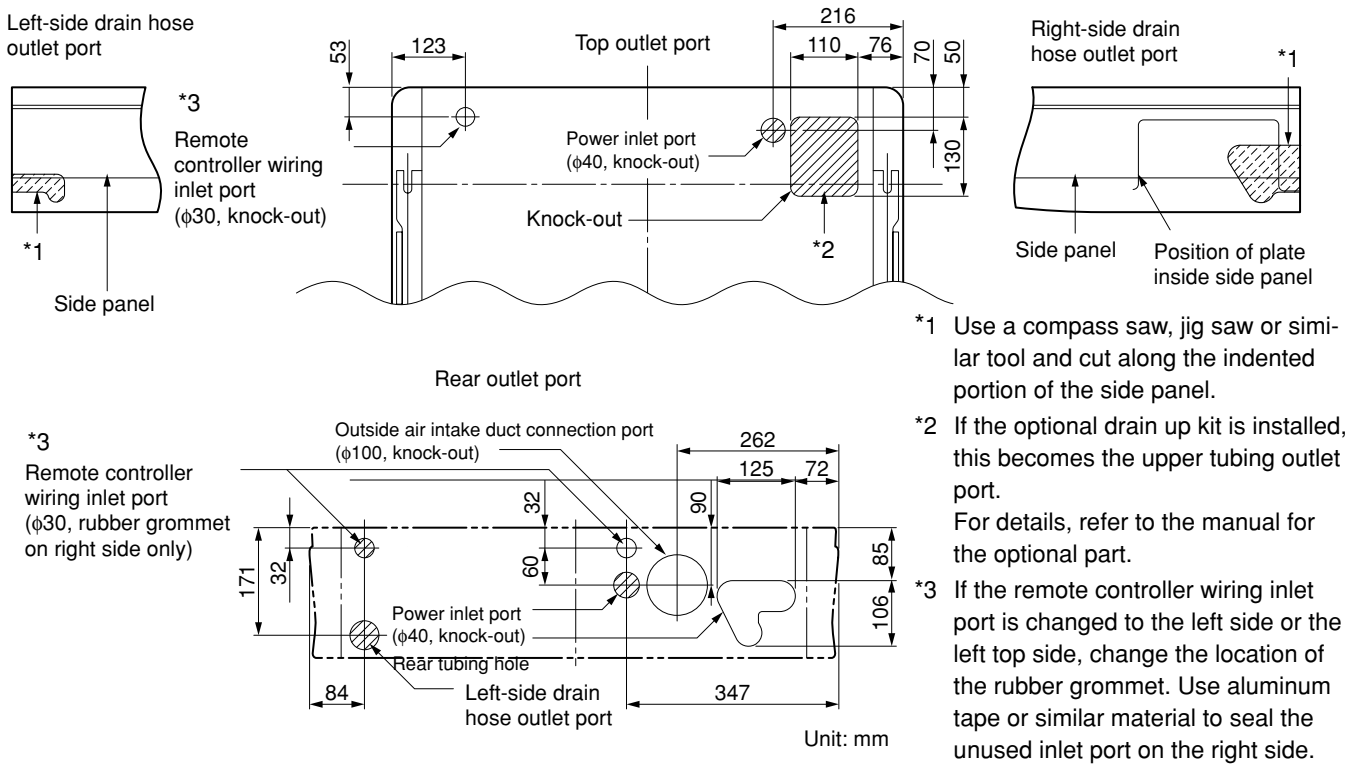


*1 Use a compass saw, jig saw or similar tool and cut along the indented portion of the side panel.

*2 If the optional drain up kit is installed, this becomes the upper tubing outlet port.
For details, refer to the manual for the optional part.

*3 If the remote controller wiring inlet port is changed to the left side or the left top side, change the location of the rubber grommet. Use aluminum tape or similar material to seal the unused inlet port on the right side.

**Fig. 3-35**

### (4) Wall and ceiling side opening position

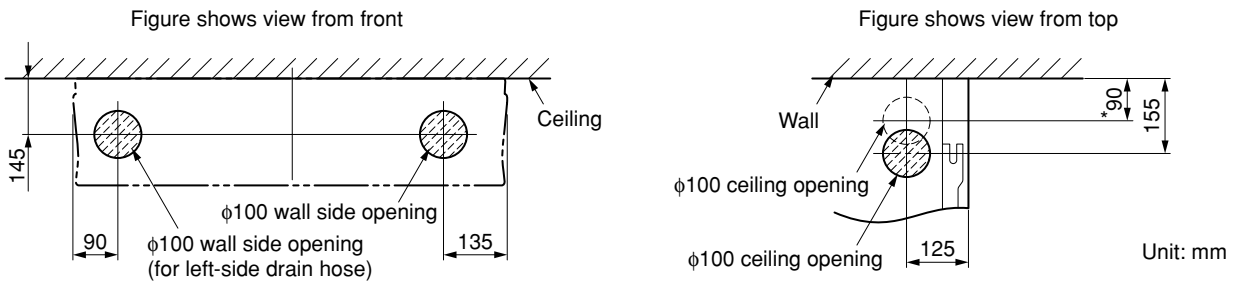


* If the optional drain up kit is installed, create a φ100 hole along the dotted line (part marked with * in figure).

**Fig. 3-36**

### 3-14. Suspending the Indoor Unit

(1) Place the full-scale diagram (supplied) on the ceiling at the spot where you want to install the indoor unit. Use a pencil to mark the drill holes. (Fig. 3-37).

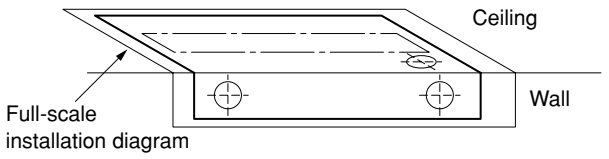


**Fig. 3-37**

**NOTE**

Since the diagram is made of paper, it may shrink or stretch slightly because of high temperature or humidity. For this reason, before drilling the holes maintain the correct dimensions between the markings.

(2) Drill holes at the 4 points indicated on the full-scale diagram.

(3) Depending on the ceiling type:

a) Insert suspension bolts as shown in Fig. 3-38.

or

b) Use existing ceiling supports or construct a suitable support as shown in Fig. 3-39.

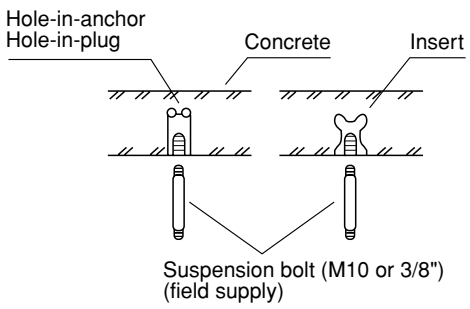


**Fig. 3-38**

**WARNING**

**It is important that you use extreme care in supporting the indoor unit from the ceiling. Ensure that the ceiling is strong enough to support the weight of the unit. Before hanging the ceiling unit, test the strength of each attached suspension bolt.**

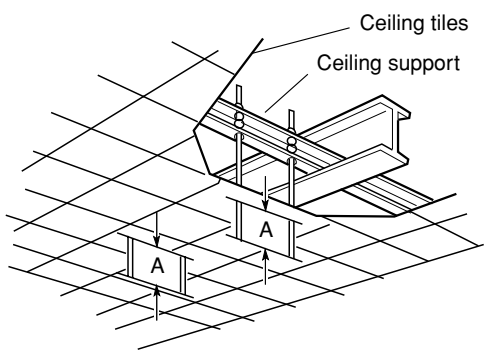


**Fig. 3-39**

(4) Screw in the suspension bolts, allowing them to protrude from the ceiling as shown in Figs. 3-38 and 3-39. The distance of each exposed bolt must be of equal length within 50 mm. (Fig. 3-40)

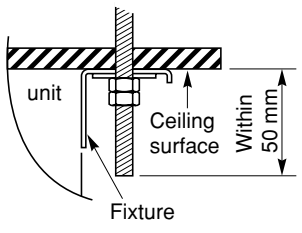


**Fig. 3-40**

SPAFP

(5) Before suspending the indoor unit, remove the 2 or 3 screws on the latch of the air-intake grilles, open the grilles, and remove them by pushing the claws of the hinges as shown in Fig. 3-41. Then remove both side panels sliding them along the unit toward the front after removing the 2 attachment screws. (Fig. 3-42)

(6) Carry out the preparation for suspending the indoor unit. The suspension method varies depending on whether there is a suspended ceiling or not. (Figs. 3-43 and 3-44)

(7) Suspend the indoor unit as follows:

a) Mount 1 washer and 2 hexagonal nuts on each suspension bolt as shown in Fig. 3-45.

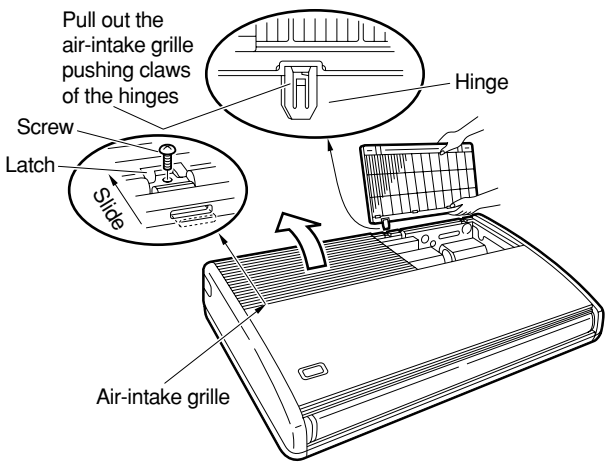


**Fig. 3-41**

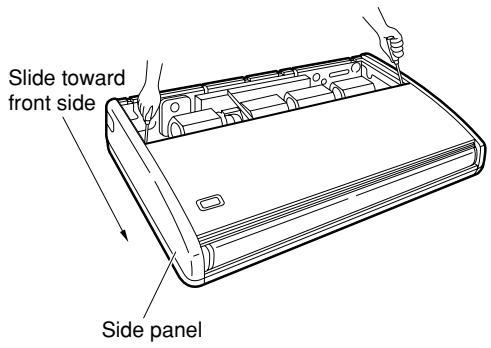


**Fig. 3-42**

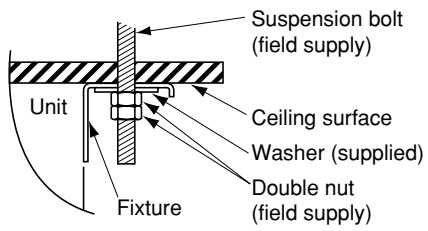


**Fig. 3-43**

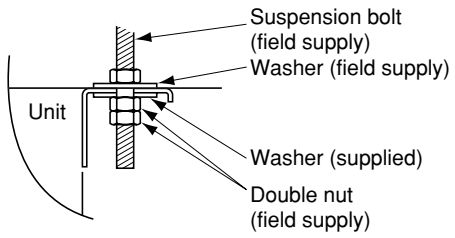


**Fig. 3-44**

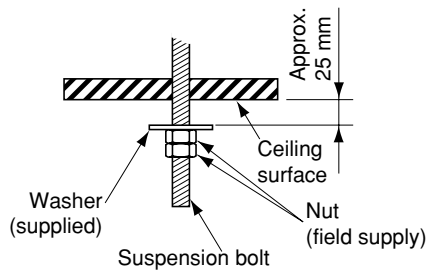


**Fig. 3-45**

SPAFP

b) Lift the indoor unit, and place it on the washers through the notches, in order to fix it in place. (Fig. 3-46)

c) Tighten the 2 hexagonal nuts on each suspension bolt to suspend the indoor unit as shown in Fig. 3-47.

**NOTE**

The ceiling surface is not always level. Confirm that the indoor unit is evenly suspended. For the installation to be correct, leave a clearance of about 10 mm between the ceiling panel and the ceiling surface and fill the gap with an appropriate insulation or filler material.

(8) If the tubing and wiring are to go towards the rear of the unit, make holes in the wall. (Fig. 3-48)

(9) Measure the thickness of the wall from the inside to the outside and cut PVC pipe at a slight angle to fit. Insert the PVC pipe in the wall. (Fig. 3-49)

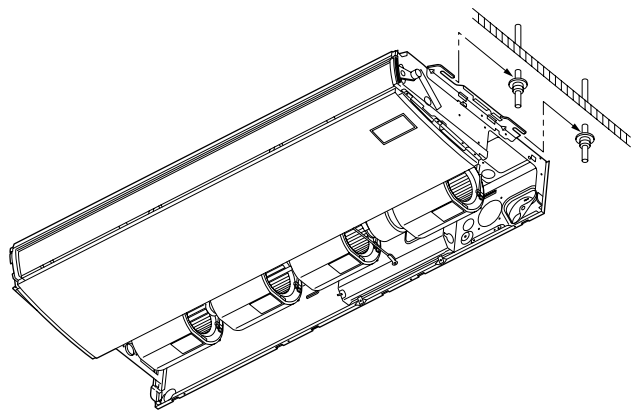

**Fig. 3-46**

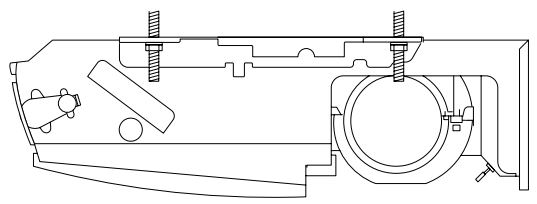

**Fig. 3-47**

**NOTE**

The hole should be made at a slight downward slant to the outside.



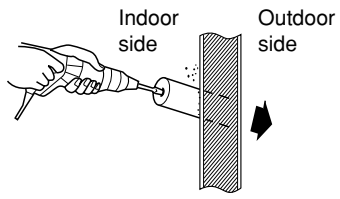


**Fig. 3-48**

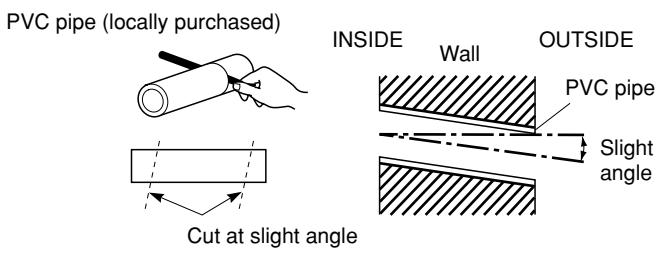


**Fig. 3-49**

### 3-15. Duct for Fresh Air

There is a duct connection port (knock-out hole) at the right-rear of the top panel of the indoor unit for drawing in fresh air. If it is necessary to draw in fresh air, remove the cover by opening the hole and connecting the duct to the indoor unit through the connection port. (Fig. 3-50)

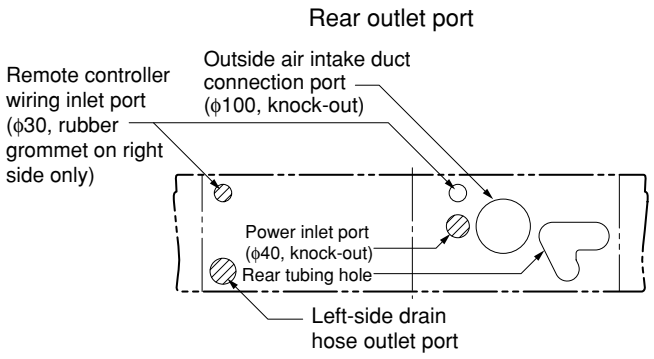


**Fig. 3-50**

### 3-16. Shaping the Tubing

- The positions of the refrigerant tubing connections are shown in the figure below. (The tubing can be routed in 3 directions.)

* When routing the tubing out through the top or right sides, knock out the appropriate parts in the top panel and cut notches in the side panel as shown in Fig. 3-35.

* When routing the tubing out through the top, the optional L-shape tubing kit is required.

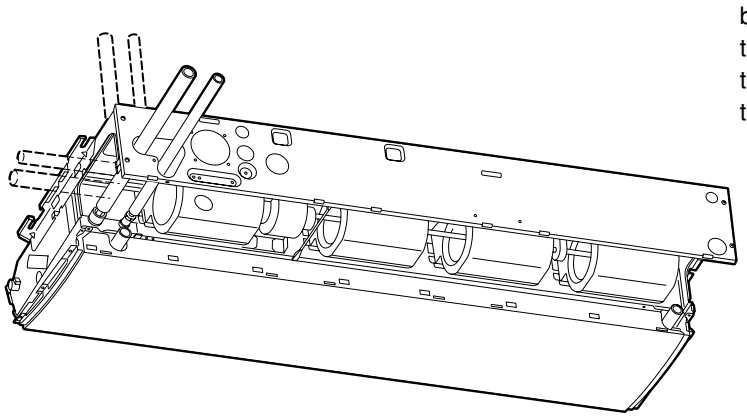

**Fig. 3-51**

If the tubing is to be routed out together, use a box cutter or similar tool to cut out the part of the rear cover indicated by the marked area in the figure below, to match the positions of the tubes. Then draw out the tubing.

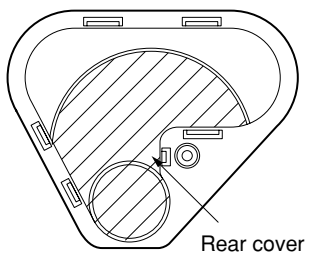


**Fig. 3-52**

SPAFP

### 3-17. Installing the Drain Piping

- Prepare standard PVC pipe for the drain and connect it to the indoor unit drain pipe with the supplied hose clamps to prevent water leaks.

(1) Drain hose connection

- The drain hose is connected below the refrigerant tubing.

(2) Installing the drain hose

- To install the drain hose, first place 1 of the 2 hose bands over the unit drain port and the other hose band over the hard PVC pipe (not supplied). Then connect both ends of the supplied drain hose.
- On the unit drain side, grasp the hose band with pliers and insert the drain hose all the way to the base.

**CAUTION**

- **Attach so that the hose band fastener is on the side of the drain port. (Fig. 3-54)**
- **Attach the hose bands so that each is approximately 5 to 25 mm from the end of the supplied drain hose.**

- If other commercially available hose bands are used, the drain hose may become pinched or wrinkled and there is danger of water leakage. Therefore be sure to use the supplied hose bands. When sliding the hose bands, be careful to avoid scratching the drain hose.
- Do not use adhesive when connecting the supplied drain hose to the drain port (either on the main unit or the PVC pipe).
- Wrap the hose with the supplied drain hose insulation and use the 4 twist ties so that the hose is insulated with no gaps.
- Connect the drain piping so that it slopes downward from the unit to the outside. (Fig. 3-53)
- Never allow traps to occur in the course of the piping.
- Insulate any piping inside the room to prevent dripping.
- After the drain piping, pour water into the drain pan to check that the water drains smoothly.
- If the drain hose is to be raised, use the optional drain up kit.
  The drain hose can be raised 60 cm above the top of the main unit. (For details, refer to the manual for the optional part.)

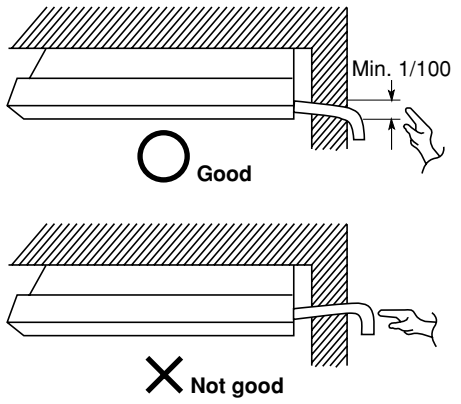


**Fig. 3-53**

* If the drain hose is routed through the left side, refer to Fig. 3-51, and follow the procedure above to install the hose. Rettach the rubber stopper removed earlier onto the right side. The rubber stopper can be inserted easily by using a screwdriver or similar tool to press the stopper into the drain port on the main unit. Press the stopper into the main unit drain port as far as it will go.

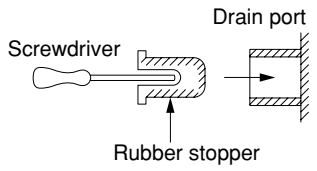


**CAUTION**

**Check local electrical codes and regulations before wiring. Also, check any specified instruction or limitations.**

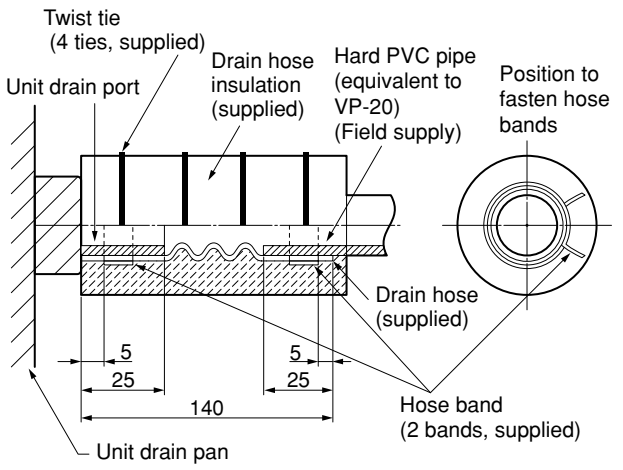


Unit: mm

**Fig. 3-54**

SPAFP

**How to carry out power supply wiring**

(1) Wiring connection ports

The power inlet ports are located at the rear and top.

The remote controller wiring inlet ports are located at the rear and top (for use with the wired remote controller).
For details, refer to Fig. 3-50. For the method used to insert the wiring, refer to the figure below. (Fig. 3-55)

**CAUTION**

**When removing the fastening bracket from the cover of the electrical component box, use caution to avoid dropping the bracket.**

(2) How to carry out wiring

- Open the knock-out hole on the rear or top of the main unit. Attach the supplied rubber grommet and pull the power wiring into the main unit.
- Feed the wiring into the wiring inlet port on the electrical component box. Connect the wiring to the terminal plate and fasten in place with the supplied clamp.
- Perform electrical and grounding work in accordance with the package A/C power specifications, and following local electrical codes and regulations.

SPAFP

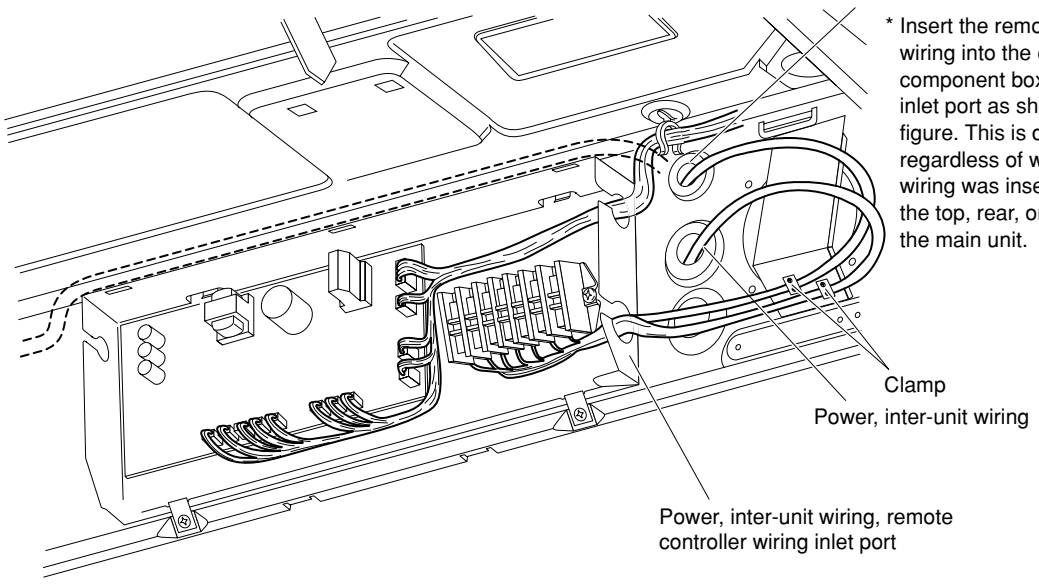


**Fig. 3-55**

## ■ Concealed-Duct Type (DSAFP Type)

### 3-18. Required Minimum Space for Installation and Service

- This air conditioner is usually installed above the ceiling so that the indoor unit and ducts are not visible. Only the air intake and air outlet ports are visible from below.
- The minimum space for installation and service is shown in Fig. 3-56 and Table 3-3.
- It is recommended that space is provided (450 × 450 mm) for checking and servicing the electrical system.
- Fig. 3-57 and Table 3-4 show the detailed dimensions of the indoor unit.

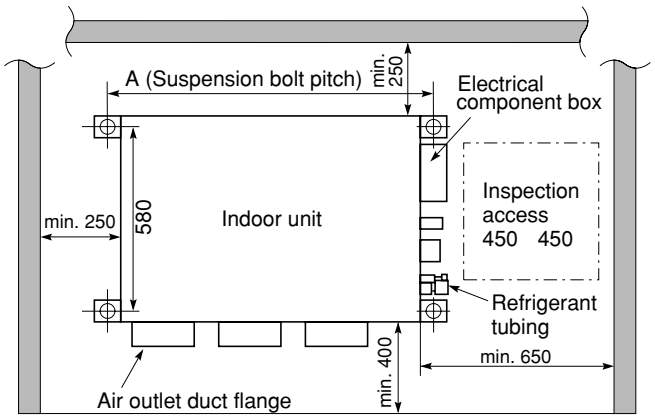


Unit: mm

**Fig. 3-56**

**Table 3-3**

Unit: mm

| Type | 12, 16, 18 | 25 | 36, 48 |
|---|---|---|---|
| A (Length) | 780 | 1,080 | 1,560 |
| Number of duct flanges | 2 | 3 | 4 |

**Table 3-4**

Unit: mm

| Type \ Dimension | A | B | C | D | E | F | G | H | I | J | K | No. of holes | |
|---|---|---|---|---|---|---|---|---|---|---|---|---|---|
| | | | | | | | | | | | | L | M |
| 12, 16, 18 | 662 | 600 (200 × 3) | 700 | 780 | 290 | 262 | 680 | 715 | 180 | – | 340 | 8 | 12 |
| 25 | 962 | 900 (180 × 5) | 1,000 | 1,080 | 290 | 272 | 980 | 1,015 | 130 | 245 (245 × 1) | 250 | 12 | 16 |
| 36, 48 | 1,442 | 1,380 (230 × 6) | 1,480 | 1,560 | 335 | 310 | 1,460 | 1,495 | 130 | 490 (245 × 2) | 240 | 16 | 18 |

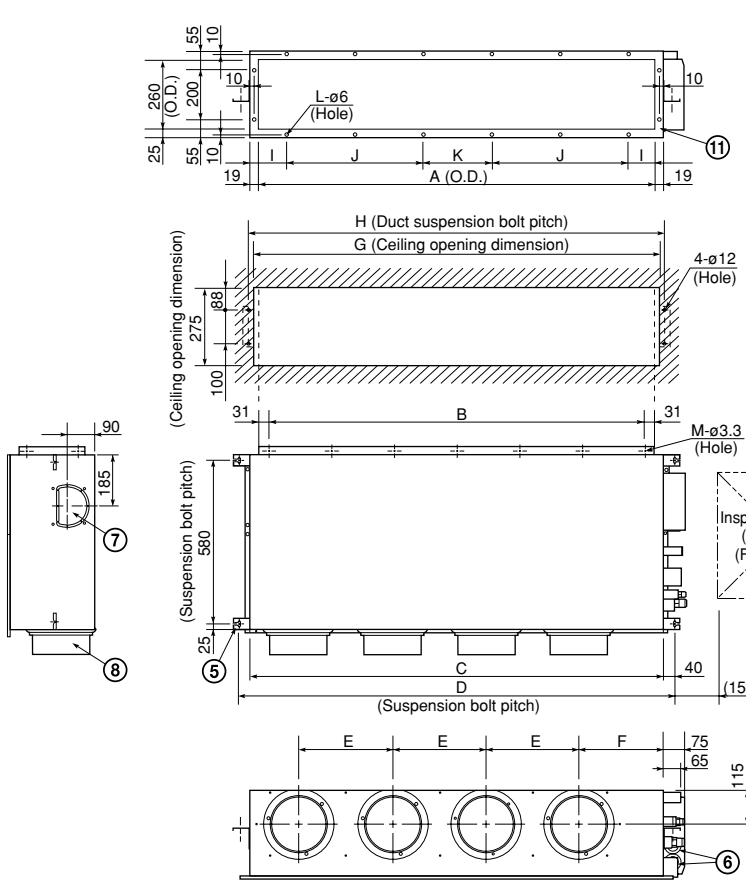


① Refrigerant tubing joint (narrow tube)
② Refrigerant tubing joint (wide tube)
③ Upper drain port (O.D. 32 mm)
④ Bottom drain port (O.D. 26 mm)
⑤ Suspension lug
⑥ Power supply outlet (2-ø30)
⑦ Fresh air intake port (ø150)
⑧ Flange for the flexible air outlet duct (ø200)
⑨ Tube cover
⑩ Electrical component box
⑪ Flange for the air intake duct (Option or field supply)

Unit: mm

**Fig. 3-57**

### 3-19. Suspending the Indoor Unit

Depending on the ceiling type:

- Insert suspension bolts as shown in Fig. 3-58

  or

- Use existing ceiling supports or construct a suitable support as shown in Fig. 3-59.

**WARNING**

**It is important that you use extreme care in supporting the indoor unit inside the ceiling. Ensure that the ceiling is strong enough to support the weight of the unit. Before hanging the unit, test the strength of each attached suspension bolt.**

(1) When placing the unit inside the ceiling, determine the pitch of the suspension bolts referring to the dimensional data on the previous page. (Fig. 3-56 and Table 3-3)
Tubing must be laid and connected inside the ceiling when suspending the unit. If the ceiling is already constructed, lay the tubing into position for connection to the unit before placing the unit inside the ceiling.

(2) Screw in the suspension bolts allowing them to protrude from the ceiling as shown in Fig. 3-58. (Cut the ceiling material, if necessary.)

(3) Thread the 3 hexagonal nuts and 2 washers (field supply) onto each of the 4 suspension bolts as shown in Figs. 3-60 and 3-61. Use 1 nut and 1 washer for the upper part, and 2 nuts and 1 washer for the lower part, so that the unit will not fall off the suspension lugs.

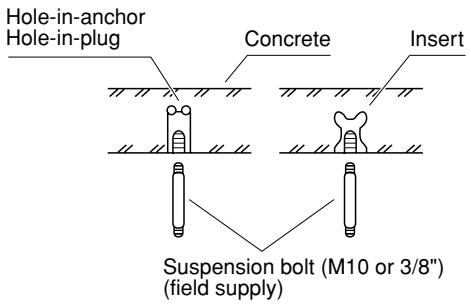


**Fig. 3-58**

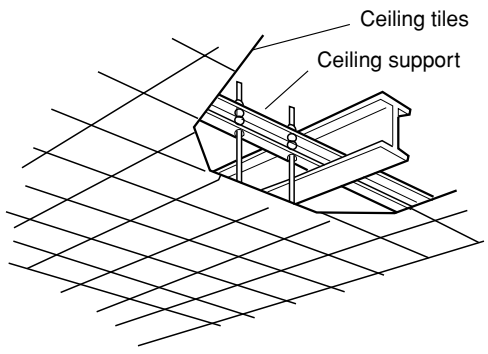


**Fig. 3-59**

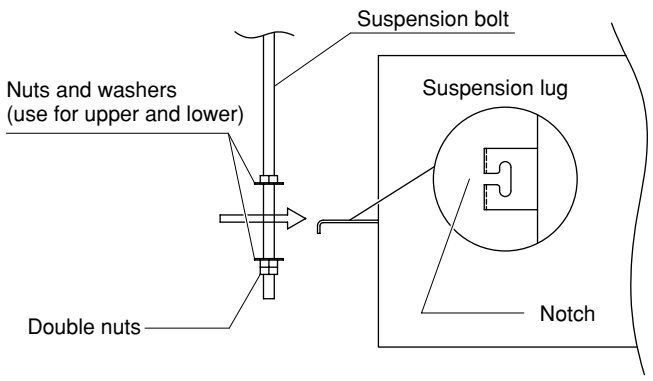


**Fig. 3-60**

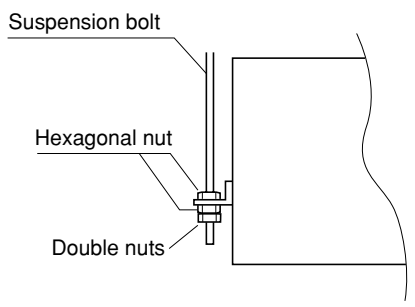


**Fig. 3-61**

● Fig. 3-62 shows an example of installation.

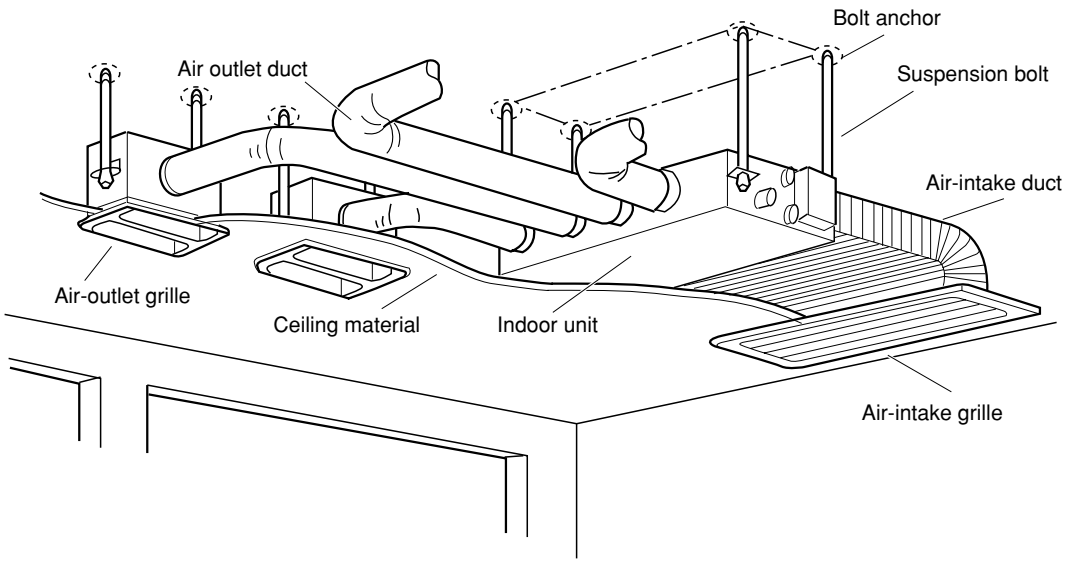


**Fig. 3-62**

### 3-20. Installing the Drain Piping

(1) Prepare standard hard PVC pipe (O.D. 32 mm) for the drain and use the supplied hose band to prevent water leaks.
The PVC pipe must be purchased separately.
The transparent drain part on the unit allows you to check drainage. (Fig. 3-63)

**CAUTION**

- **Do not use adhesive at the drain connection port on the indoor unit.**
- **Insert the drain pipe until it contacts the socket, as shown in the figure at right, then secure it tightly with the hose band.**
- **Do not use the supplied drain hose bent at a 90° angle. (The maximum permissible bend is 45°.)**
- **Tighten the hose clamps so their locking nuts face upward. (Flg. 3-63)**

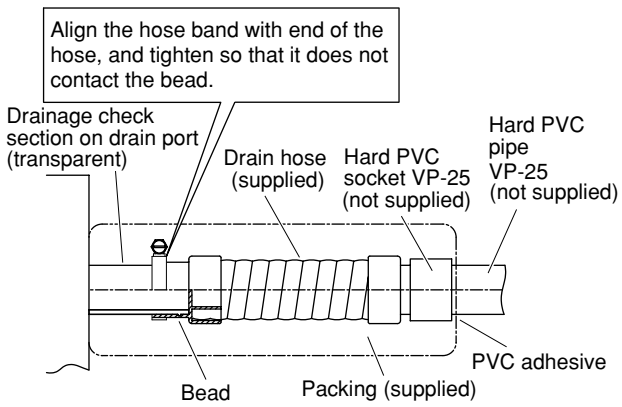


**Fig. 3-63**

(2) After connecting the drain piping securely, wrap the supplied packing and drain pipe insulator around the pipe, then secure it with the supplied vinyl clamps. (Fig. 3-64)

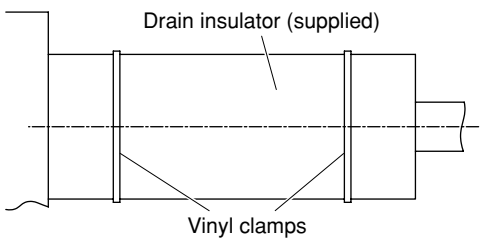


**Fig. 3-64**

**NOTE**

Make sure the drain pipe has a downward gradient (1/100 or more) and that there are no water traps.

**CAUTION**

- **Do not install an air bleeder as this may cause water to spray from the drain pipe outlet. (Fig. 3-65)**

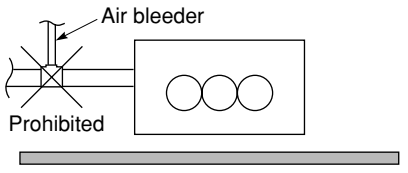


**Fig. 3-65**

- **If it is necessary to increase the height of the drain pipe, the section directly after the connection port can be raised a maximum of 50 cm. Do not raise it any higher than 50 cm, as this could result in water leaks. (Fig. 3-66)**
- Do not install the pipe with an upward gradient from the connection port. This will cause the drain water to flow backward and leak when the unit is not operating. (Fig. 3-67)
- Do not apply force to the piping on the unit side when connecting the drain pipe. The pipe should not be allowed to hang unsupported from its connection to the unit. Fasten the pipe to a wall, frame, or other support as close to the unit as possible. (Fig. 3-68)

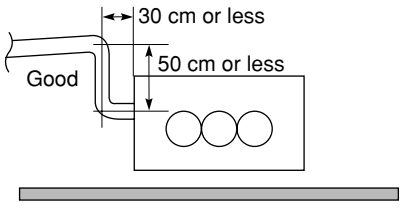


**Fig. 3-66**

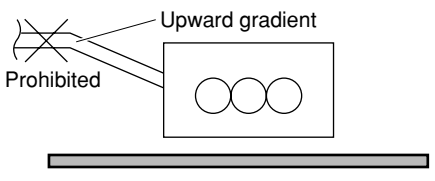


**Fig. 3-67**

### 3-21. Checking the Drainage

After wiring and drain piping are completed, use the following procedure to check that the water will drain smoothly. For this, prepare a bucket and wiping cloth to catch and wipe up spilled water.

(1) Connect power to the power terminal board (R, S terminals) inside the electrical component box.

(2) Remove the tube cover and through the opening, slowly pour about 1,200 cc of water into the drain pan to check drainage.

(3) Short the check pin (CHK) on the indoor control board and operate the drain pump. Check the water flow through the transparent drain port and see if there is any leakage.

**CAUTION**

**Be careful since the fan will start when you short the pin on the indoor control board.**

(4) When the check of drainage is complete, open the check pin (CHK) and remount the insulator and drain cap onto the drain inspection port.

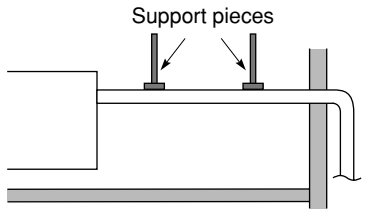


**Fig. 3-68**

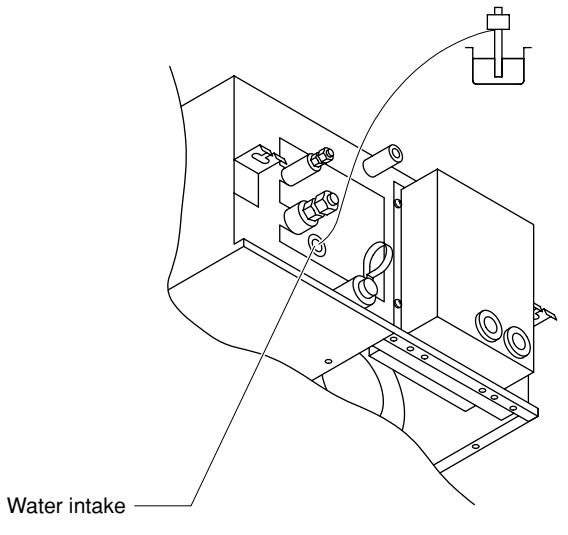


**Fig. 3-69**

### 3-22. Increasing the Fan Speed

If external static pressure is too great (due to long extension of ducts, for example), the air flow volume may drop too low at each air outlet. This problem may be solved by increasing the fan speed using the following procedure:

(1) Remove 4 screws on the electrical component box and remove the cover plate.

(2) Disconnect the fan motor sockets in the box.

(3) Take out the booster cable (sockets at both ends) clamped in the box.

(4) Securely connect the booster cable sockets between the disconnected fan motor sockets in step 2 as shown in Fig. 3-70.

(5) Place the cable neatly in the box and reinstall the cover plate.

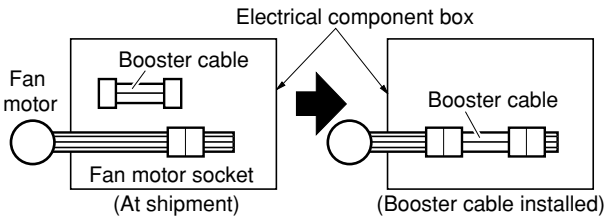


**Fig. 3-70**

**Indoor Fan Performance**

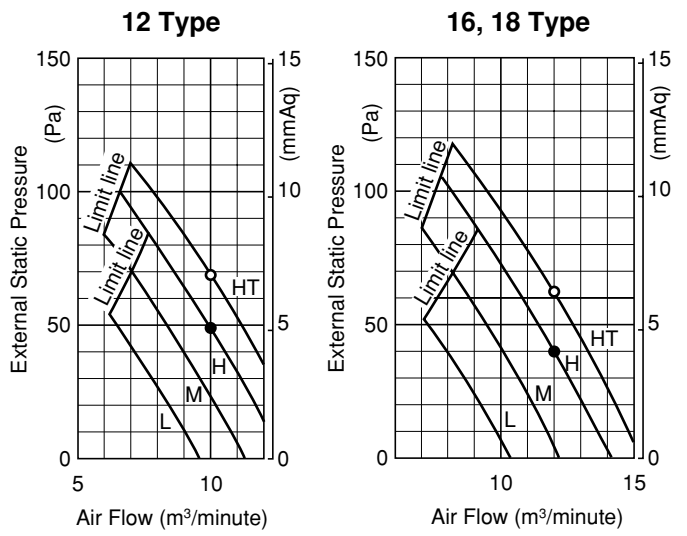


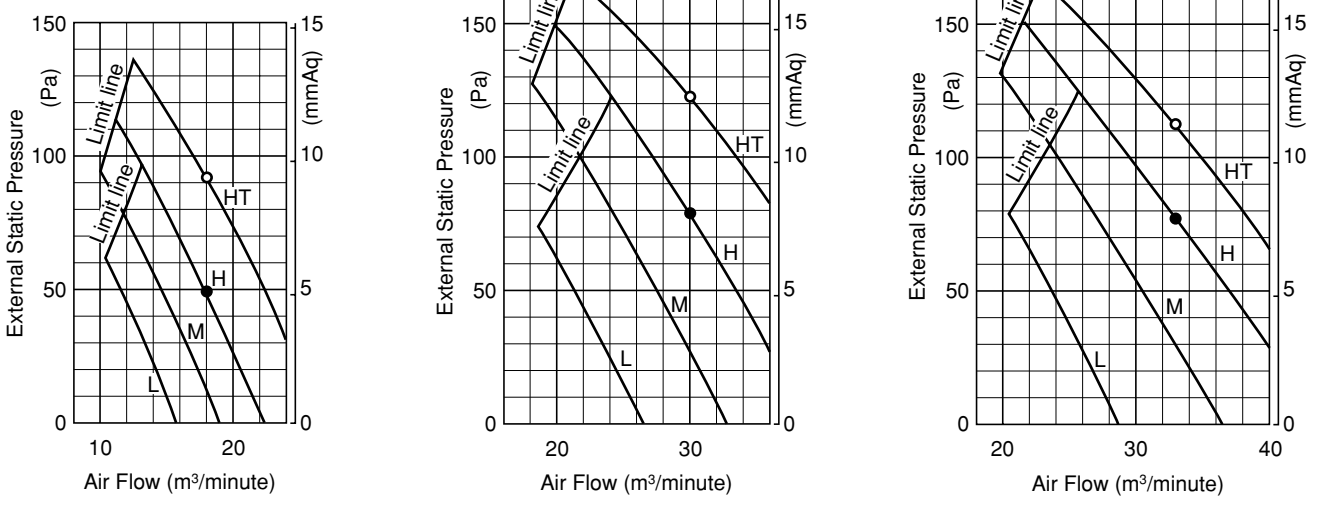


**NOTE** HT : Using the booster cable

H : At shipment

**Fig. 3-71**

**■ How to read the diagram**

The vertical axis is the external static pressure (Pa) while the horizontal axis represents the air flow (m³/minute). The characteristic curves for “HT,” “H,” “M” and “L” fan speed control are shown. The nameplate values are shown based on the “H” air flow. For the 25 type, the air flow is 18 m³/minute, while the external static pressure is 49 Pa at “H” position. If external static pressure is too great (due to long extension of ducts, for example), the air flow volume may drop too low at each air outlet. This problem may be solved by increasing the fan speed as explained above.

# 4. HOW TO INSTALL THE OUTDOOR UNIT

## 4-1. Installing the Outdoor Unit

- Use concrete or a similar material to create the base, and ensure good drainage.
- Ordinarily, ensure a base height of 5 cm or more. If a drain pipe is used, or for use in cold-weather regions, ensure a height of 15 cm or more at the feet on both sides of the unit.
  (In this case, leave clearance below the unit for the drain pipe, and to prevent freezing of drainage water in cold-weather regions.)
- Refer to the Fig. 4-1 for the anchor bolt dimensions.
- Be sure to anchor the feet with the anchor bolts (M10). In addition, use anchoring washers on the top side. (Use large square 32 ( 32 SUS washers with JIS nominal diameters of 10.) (Field supply)

## 4-2. Drainage Work

Follow the procedure below to ensure adequate draining for the outdoor unit.

- For the drain port dimensions, refer to the figure at right.
- Ensure a base height of 15 cm or more at the feet on both sides of the unit.
- When using a drain pipe, install the drain socket (optional part STK-DS25T) onto the drain port. Seal the other drain port with the rubber cap supplied with the drain socket.
- For details, refer to the instruction manual of the drain socket (optional part STK-DS25T).

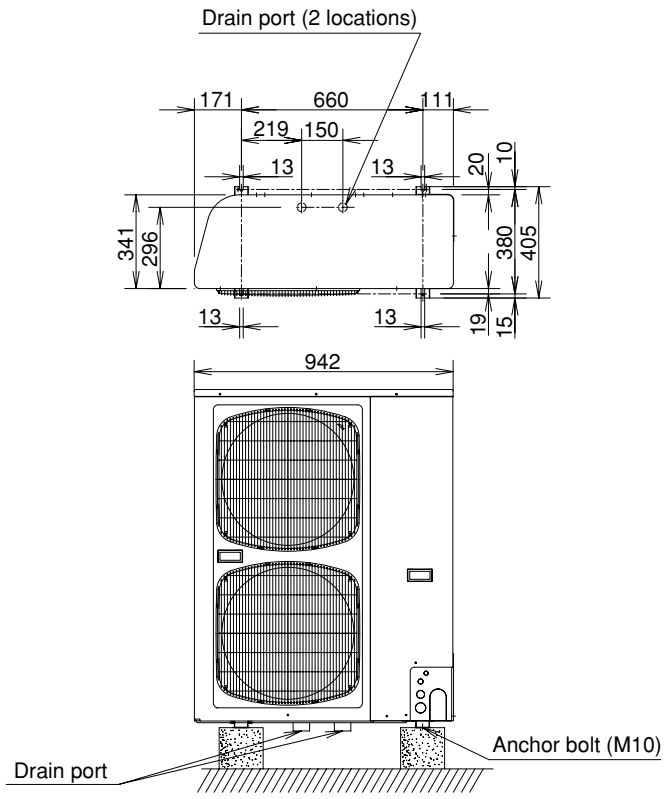


**Fig. 4-1**

## 4-3. Routing the Tubing and Wiring

- The tubing and wiring can be extended out in 4 directions: front, rear, right, and down.
- The service valves are housed inside the unit. To access them, remove the inspection panel. (To remove the inspection panel, remove the 3 screws, then slide the panel downward and pull it toward you.)

(1) If the routing direction is through the front, rear, or right, use a nipper or similar tool to cut out the knockout holes for the inter-unit control wiring outlet, power wiring outlet, and tubing outlet from the appropriate covers A and B.

(2) If the routing direction is down, use a nipper or similar tool to cut out the lower flange from cover A.

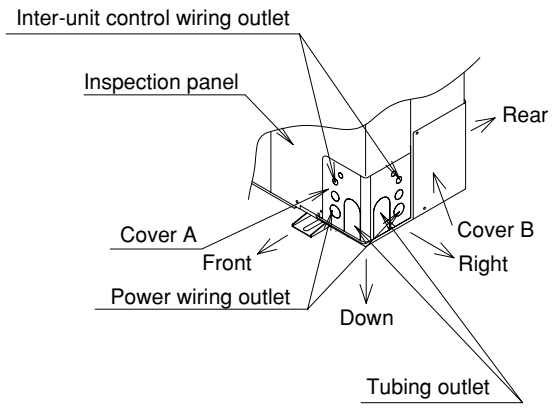


**Fig. 4-2**

**CAUTION**

- **Route the tubing so that it does not contact the compressor, panel, or other parts inside the unit. Increased noise will result if the tubing contacts these parts.**
- **When routing the tubing, use a tube bender to bend the tubes.**

# 5. ELECTRICAL WIRING

## 5-1. General Precautions on Wiring

(1) Before wiring, confirm the rated voltage of the unit as shown on its nameplate, then carry out the wiring closely following the wiring diagram.

(2) Provide a power outlet to be used exclusively for each unit, and a power supply disconnect and circuit breaker for overcurrent protection should be provided in the exclusive line.

(3) To prevent possible hazards from insulation failure, the unit must be grounded.

(4) Each wiring connection must be done in accordance with the wiring system diagram. Wrong wiring may cause the unit to misoperate or become damaged.

(5) Do not allow wiring to touch the refrigerant tubing, compressor, or any moving parts of the fan.

(6) Unauthorized changes in the internal wiring can be very dangerous. The manufacturer will accept no responsibility for any damage or misoperation that occurs as a result of such unauthorized changes.

(7) Regulations on wire diameters differ from locality to locality. For field wiring rules, please refer to your LOCAL ELECTRICAL CODES before beginning.

You must ensure that installation complies with all relevant rules and regulations.

(8) To prevent malfunction of the air conditioner caused by electrical noise, care must be taken when wiring as follows:

- The remote control wiring and the inter-unit control wiring should be wired apart from the inter-unit power wiring.
- Use shielded wires for inter-unit control wiring between units and ground the shield on both sides.

(9) If the power supply cord of this appliance is damaged, it must be replaced by a repair shop appointed by the manufacture, because special purpose tools are required.

## 5-2. Recommended Wire Length and Wire Diameter for Power Supply System

**Outdoor unit**

| | (A) Power supply | | Time delay fuse or circuit capacity |
|---|---|---|---|
| | Wire size | Max. length | |
| GRFP255L, GRFP255R | 4 $mm^2$ | 24 m | 30 A |
| GRFP365L, GRFP365R | 4 $mm^2$ | 22 m | 40 A |
| GRFP485L, GRFP485R | 4 $mm^2$ | 20 m | 50 A |

**Indoor unit**

| Type | (B) Power supply | Time delay fuse or circuit capacity |
|---|---|---|
| | 2.5 $mm^2$ | |
| MAFP | Max. 150 m | 10 A |
| CAFP, SPAFP, DSAFP | Max. 130 m | 10 A |

**Control wiring**

| (C) Inter-unit (between outdoor and indoor units) control wiring | (D) Remote control wiring | (E) Control wiring for group control |
|---|---|---|
| 0.75 $mm^2$ (AWG #18)<br>**Use shielded wiring*** | 0.75 $mm^2$ (AWG #18)<br>**Use shielded wiring** | 0.75 $mm^2$ (AWG #18)<br>**Use shielded wiring** |
| Max. 1,000 m | Max. 500 m | Max. 500 m (Total) |

**NOTE**

* With ring-type wire terminal.

## 5-3. Wiring System Diagrams

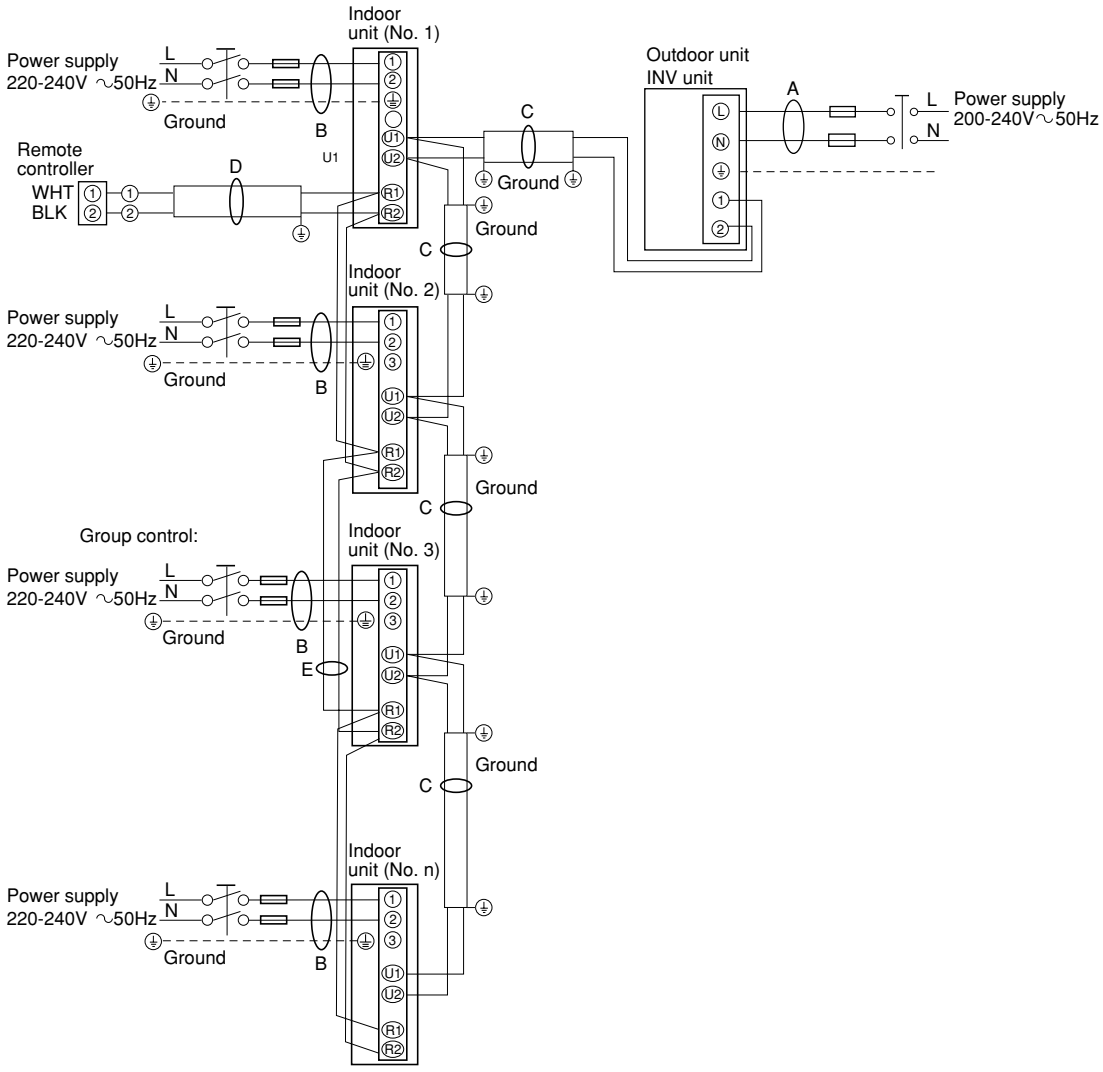


**NOTE**

(1) Refer to Section 5-2. “Recommended Wire Length and Wire Diameter for Power Supply System” for the explanation of “A,” “B,” “C,” “D,” and “E,” in the above diagrams.

(2) The basic connection diagram of the indoor unit shows the 7P terminal board, so the terminal boards in your equipment may differ from the diagram.

(3) Refrigerant Circuit (R.C.) address should be set before turning the power on.

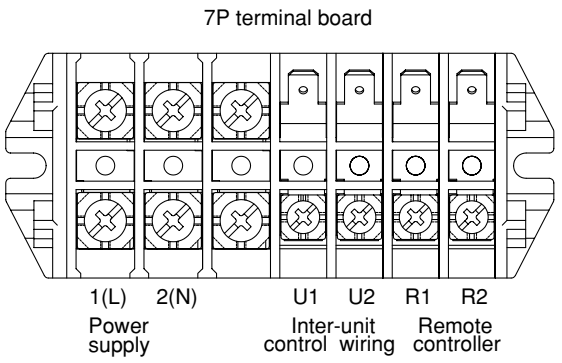


**CAFP, SPAFP Type**

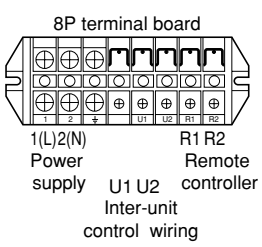


**DSAFP Type**

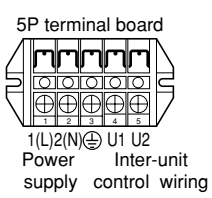


**MAFP Type**

**CAUTION**

**(1) When linking outdoor units in a network (S-net link system), disconnect the terminal extended from the short plug (CN003, 2P Black, location: right bottom on the outdoor main control PCB) from all outdoor units except any one of the outdoor units.**
**(When shipping: In shorted condition.)**

**Otherwise the communication of S-net link system is not performed. For a system without link (no connection wiring between outdoor units), do not remove the short plug.**

**(2) Do not install the inter-unit control wiring in a way that forms a loop. (Fig. 5-1)**

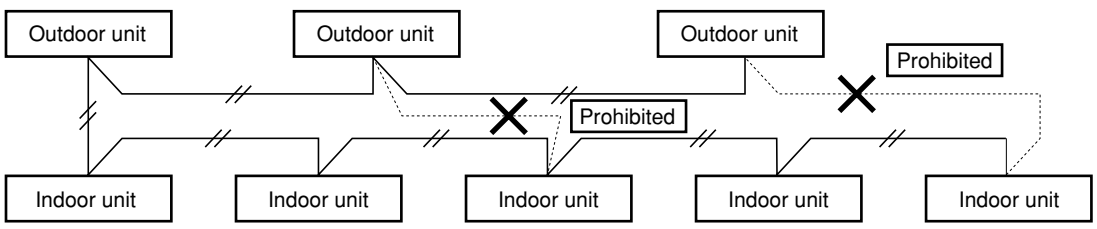


**Fig. 5-1**

**(3) Do not install inter-unit control wiring such as star branch wiring. Star branch wiring causes mis-address setting.**

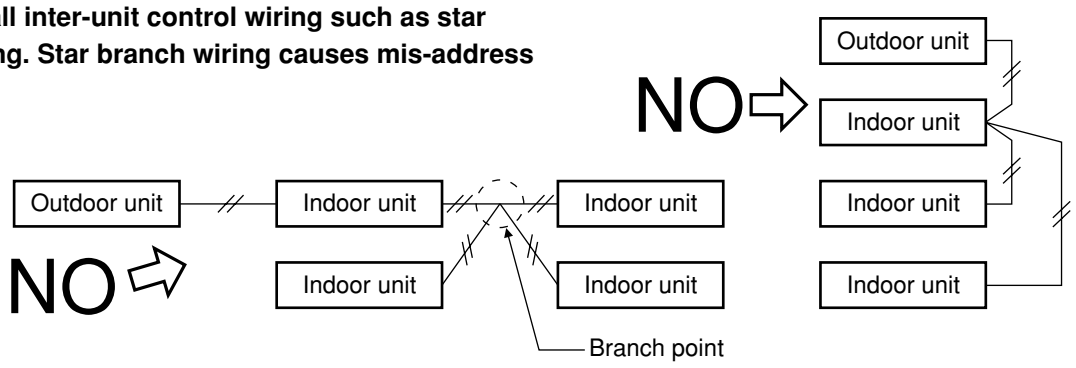


**Fig. 5-2**

**(4) If branching the inter-unit control wiring, the number of branch points should be 16 or fewer. (Branches less than 1 m are not included in the total branch number.) (Fig. 5-3)**

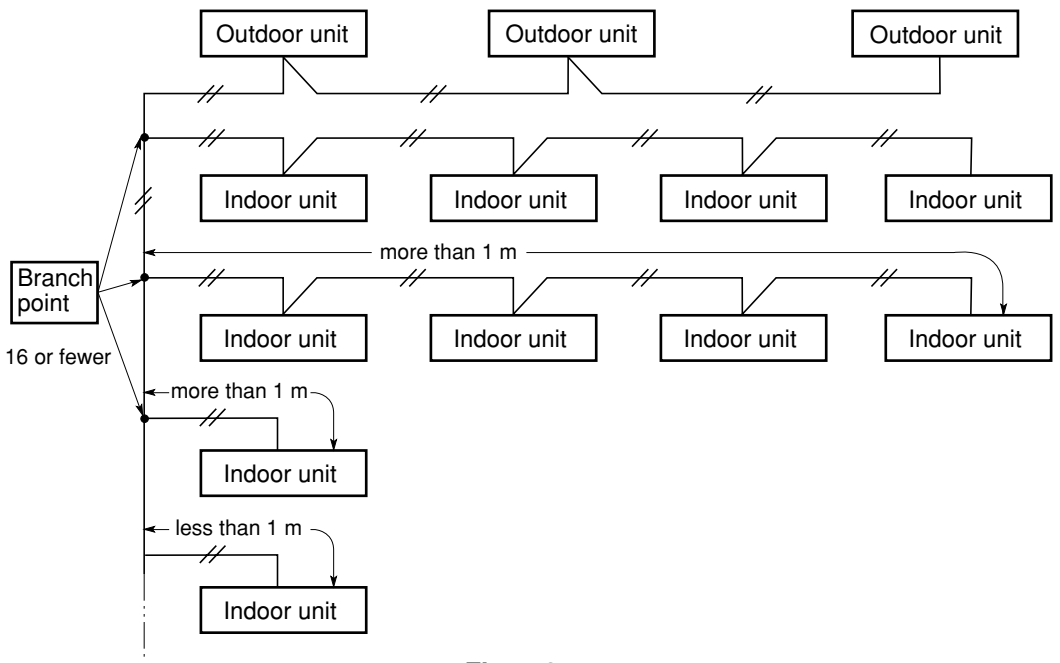


**Fig. 5-3**

**(5) Use shielded wires for inter-unit control wiring (c) and ground the shield on both sides, otherwise misoperation from noise may occur. (Fig. 5-4)**
**Connect wiring as shown in Section "5-3. Wiring System Diagrams."**




**Fig. 5-4**

**WARNING**

**Loose wiring may cause the terminal to overheat or result in unit malfunction. A fire hazard may also exist. Therefore, ensure that all wiring is tightly connected.**

When connecting each power wire to the terminal, follow the instructions on "How to connect wiring to the terminal" and fasten the wire securely with the fixing screw of the terminal plate.

**How to connect wiring to the terminal**

**■ For stranded wiring**

(1) Cut the wire end with cutting pliers, then strip the insulation to expose the stranded wiring about 10 mm and tightly twist the wire ends. (Fig. 5-5)

(2) Using a Phillips head screwdriver, remove the terminal screw(s) on the terminal plate.

(3) Using a ring connector fastener or pliers, securely clamp each stripped wire end with a ring pressure terminal.

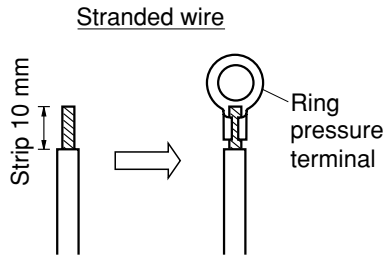


**Fig. 5-5**

(4) Place the ring pressure terminal, and replace and tighten the removed terminal screw using a screwdriver. (Fig. 5-6)

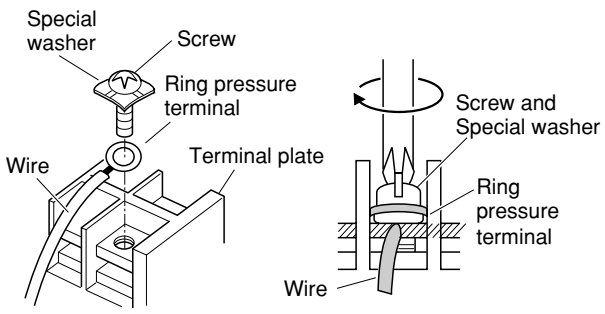


**Fig. 5-6**

## 6. HOW TO INSTALL THE REMOTE CONTROLLER (OPTIONAL PART)

Remote controller wiring can be extended to a maximum of 1,000 m.

■ **How to install the remote controller (Optional Controller)**

**CAUTION**

- **Do not twist the control wiring with the power wiring or run it in the same metal conduit, because this may cause malfunction.**
- **Install the remote controller away from sources of electrical noise.**
- **Install a noise filter or take other appropriate action if electrical noise affects the power supply circuit of the unit.**

The mounting position for the remote controller should be located in an accessible place for control. Never cover the remote controller or recess it into the wall.

(1) When you open the decorative cover, you will see 2 gaps under the remote controller. Insert a coin into these gaps and pry off the back case. (Fig. 6-1)

### 6-1. When Using a Wall Box for Flush Mounting

- If local codes allow, this remote controller can be mounted using a conventional wall box for flush mounting.

(2) Attach the back case with the 2 small screws provided. Using a screwdriver, push open the cut-outs on the back case. These holes are for screws. Use the spacers and take care not to tighten the screws excessively. If the back case will not seat well, cut the spacers to a suitable thickness. (Fig. 6-1)

(3) Connect the remote controller wiring (2 wires) correctly to the corresponding terminals in the electrical component box of the indoor unit.

**CAUTION**

**When wiring, do not connect the remote controller wires to the adjacent terminal block for the power wiring. Otherwise, the unit will break down.**

(4) To finish, fit the back tabs of the case into the remote controller and mount it.

**CAUTION**

**Do not supply power to the unit or try to operate it until the tubing and wiring to the outdoor unit is completed.**

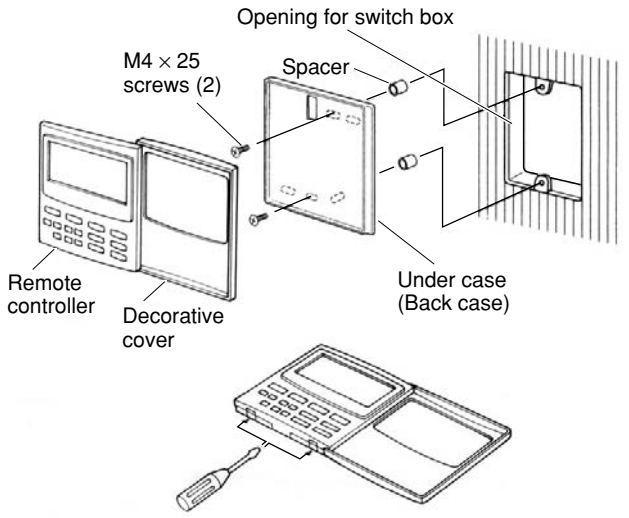


**Fig. 6-1**

**Accessories for remote controller switch**

| No. | Accompanying parts | Q'ty | No. | Accompanying parts | Q'ty |
|---|---|---|---|---|---|
| 1 | Remote controller switch (with 200 mm wire)  | 1 | 4 | Spacers 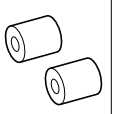 | 2 |
| 2 | Small screws M4×25  | 2 | 5 | Wire joints 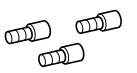 | 2 |
| 3 | Wood screws  | 2 | | | |

**Diagram of outer dimensions**

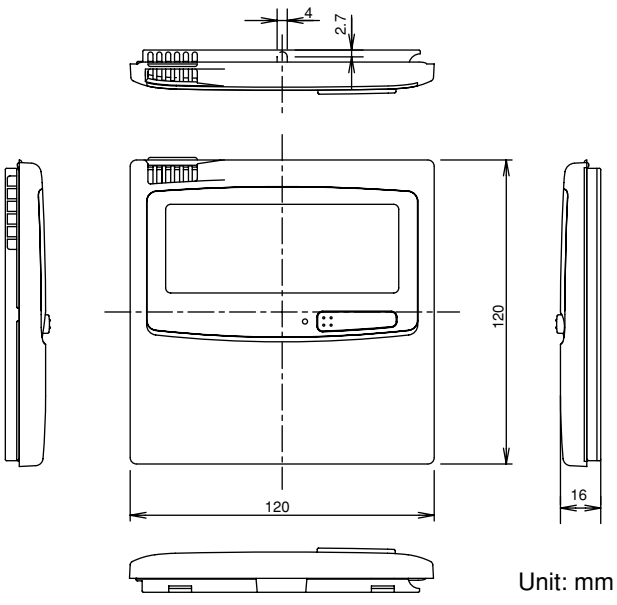


Unit: mm

**Fig. 6-2**

K

## 6-2. Basic Wiring Diagram (Twin, Triple, Double-Twin)

**CAUTION**

**Install wiring correctly (incorrect wiring will damage the equipment).**

- Use shielded wires for remote control wiring and ground the shield on one side. (Fig. 6-3) Otherwise misoperation due to noise may occur.

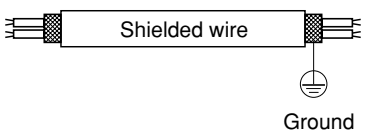


**Fig. 6-3**

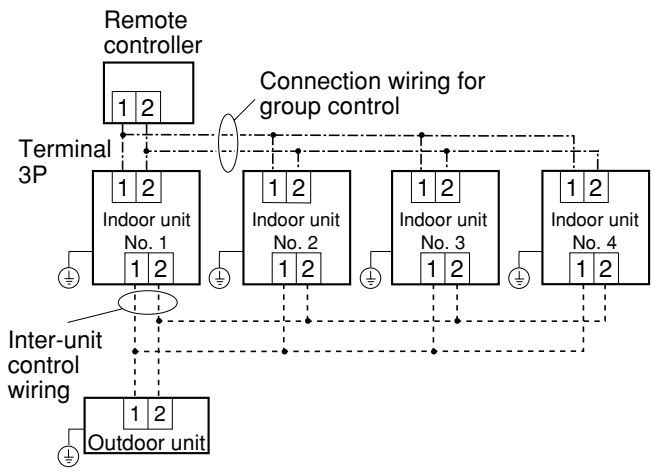


**Fig. 6-4**

## 6-3. Wiring System Diagram for Group Control

This diagram shows when several units (maximum of 4) are controlled by a remote controller (master unit). In this case, a remote controller can be connected at any indoor unit.

### Wiring procedure

Wire according to the right diagram:

- Each successive unit will respond at 1-second intervals following the order of the group address when the remote controller is operated.

### Group control using 2 remote controllers

It does not matter which of the 2 remote controllers you set as the main controller.

When using multiple remote controllers (up to 2 can be used), one serves as the main remote controller and the other as the sub-remote controller.

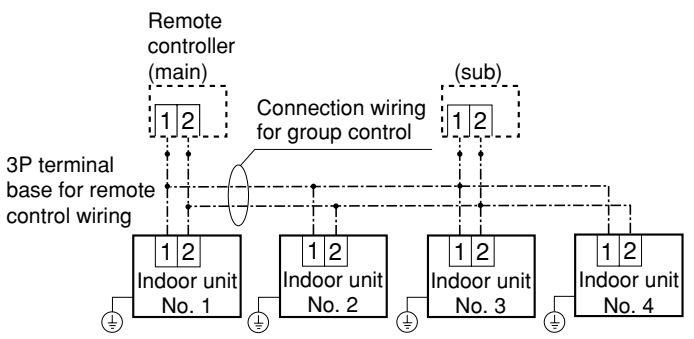


**Fig. 6-5**

K

**Setting the main and sub remote controllers**

1. Set one of the 2 connected remote controllers as the main remote controller.
2. On the other remote controller (sub-remote controller), switch the remote controller address connector on the rear of the remote controller PCB from Main to Sub. When the connector has been switched, the remote controller will function as the sub-remote controller.

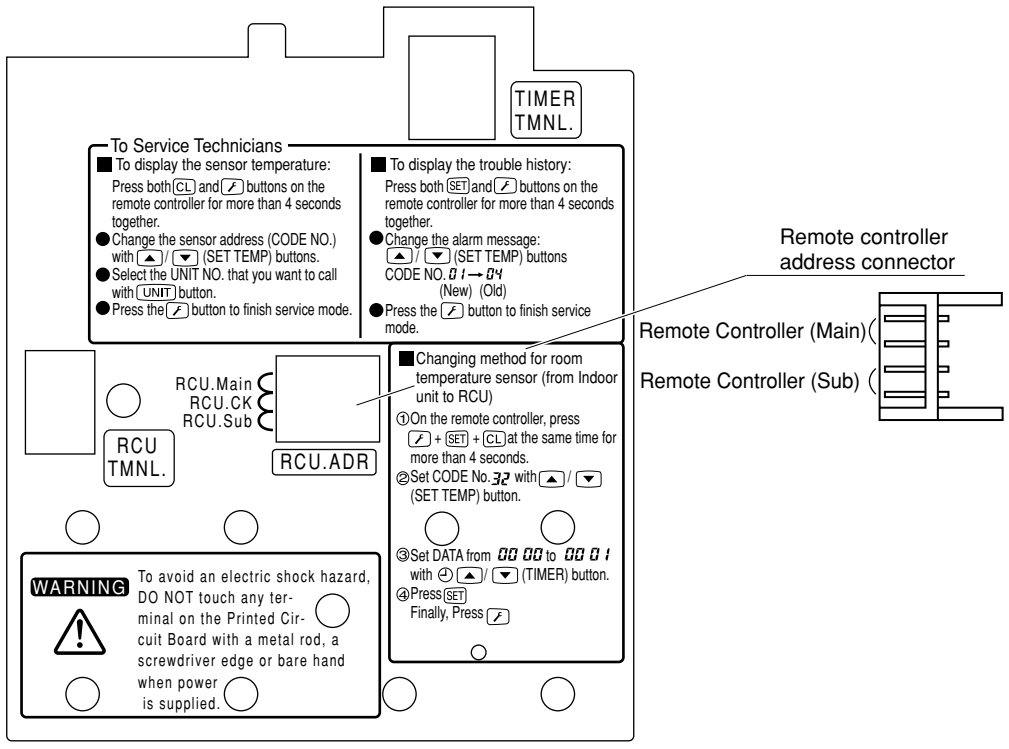


**Fig. 6-6**

**NOTE**

**Cautions on group control**

- **Group control within the same refrigerant tubing system is recommended.**

[Tubing system which is NOT recommended]

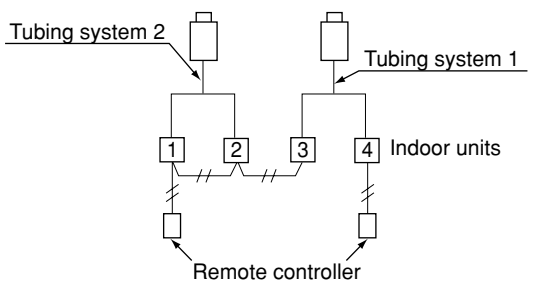


<Example 1> In this system, group control extending over tubing systems becomes impossible to set, which means the indoor units cannot operate.

K

### 6-4. Switching the Room Temperature Sensors

Room temperature sensors are contained in the indoor unit and in the remote controller.
One or the other of the temperature sensors is used for operation. Normally, the indoor unit sensor is set; however, the procedure below can be used to switch to the remote controller sensor.

(1) Press and hold the ⏍ + SET + CL buttons for 4 seconds or longer.

**NOTE**

- The unit No. that is initially displayed is the indoor unit address of the group control master unit.
- Do not press the UNIT button.

(2) Use the temperature setting ▲/▼ buttons to select item code 32.

(3) Use the timer time ▲/▼ buttons to change the setting data from 0000 to 0001.

(4) Press the SET button. (The change is completed when the display stops blinking.)

(5) Press the ⏍ button.

The unit returns to normal stop status. At this time, “Remote controller sensor” is displayed on the LCD.

**NOTE**

- If 2 remote controllers are used for control, this setting can be made from either the main or sub remote controller. However, the temperature sensor that is used is the sensor in the main remote controller.
- When group control is used, the remote controller sensor will not function unless the group address is set to the address of the master indoor unit.
- If both the remote sensor and remote controller are used, do not use the temperature sensor in the remote controller.

### 6-5. Connecting to a Ventilation Fan

If a commercially available ventilation fan or similar device is run from the ventilation fan output terminal (FAN DRIVE: 2P (white), DC 12 V) (Note) on the indoor unit PCB, use the FAN button to enable fan operation and change the settings.

(1) Press and hold the ⏍ + SET + CL buttons for 4 seconds or longer.

**NOTE**

- The unit No. that is initially displayed is the indoor unit address of the group control master unit.
- Do not press the UNIT button.

(2) Use the temperature setting ▲/▼ buttons to select item code 31.

(3) Use the timer time ▲/▼ buttons to change the setting data from 0000 to 0001.

(4) Press the SET button. (The change is completed when the display stops blinking.)

(5) Press the ⏍ button.

The unit returns to normal stop status. Press the FAN button and check that “Fan” is displayed on the LCD display.

(Note) A special relay is required to run the ventilating fan.

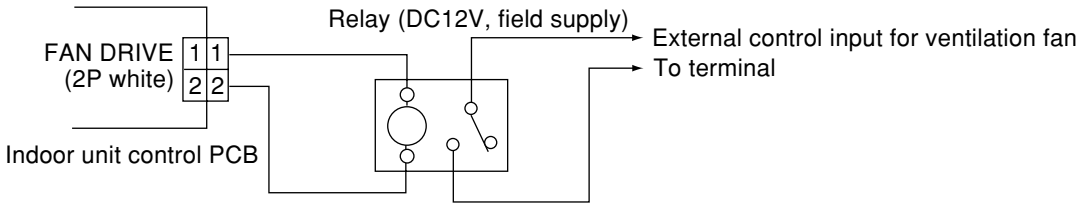


NOTE: The wiring from the indoor unit control PCB to the relay must be no more than 2 m in length.

K

### 6-6. Wiring the Remote Controller

<Flush Mounting>

● Connection diagram

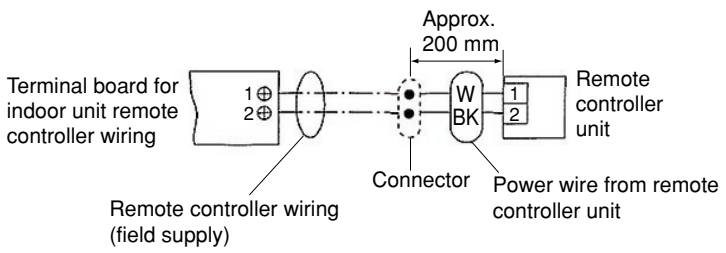


● Use 0.5 $mm^2$ – 2 $mm^2$ wires.

(1) Strip the insulation to approximately 14 mm from the ends of the wires that will be connected.

(2) Twist together the 2 wires and create a crimp connection at the wire joint.

(3) If a special crimping tool is not used, or if the connection is soldered, insulate the wires using insulation tape.

**Provided wire joint (white)**

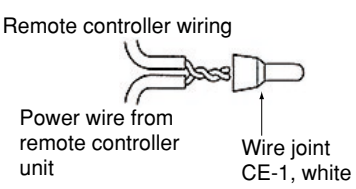


● Use the remote controller cord (optional) for remote controller wiring.

(1) Disconnect the lead wire that is wound around the lead wire anchor on the remote controller unit. Disconnect the connector and connect the remote controller cord (optional) to the connector on the remote controller unit. Insert the remote controller cord (optional) into the groove and bend it into the correct shape, then wind it around the lead wire anchor.

(2) If the remote controller cord (optional) is used, refer to the installation manual that is provided with the cord.

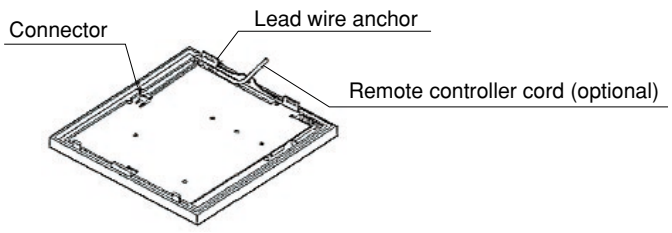


K

## 6-7. Trouble Diagnostics

(1) Contents of remote controller switch alarm display

| Possible cause of malfunction | | | Wired remote control display | Wireless remote controller receiver display | | |
|---|---|---|---|---|---|---|
| | | | | Operation | Timer | Standby for heating |
| Serial communication errors Mis-setting | Remote controller is detecting error signal from indoor unit | Error in receiving serial communication signal (Signal from main indoor unit in case of group control) Outdoor system address, indoor system address, or indoor unit individual/main/sub setting is not set (Automatic address setting is not completed) Auto address is not completed | E01 | ☼ | ● | ● |
| | | Error in transmitting serial communication signal | E02 | | | |
| | Indoor unit is detecting error signal from remote controller (and system controller) | | E03 | | | |
| | Improper setting of indoor unit or remote controller | Indoor unit address setting is duplicated | E08 | | | |
| | | Remote controller setting is duplicated | E09 | | | |
| | Indoor unit is detecting error signaled from signal option | Error in transmitting serial communications signal | E10 | | | |
| | | Error in receiving serial communications signal | E11 | | | |
| | Setting error | Main unit duplication in simultaneous-operation multi control (detected by outdoor unit) | E14 | ● | ● | ☼ |
| | Indoor unit is detecting error signaled from outdoor unit | Error in receiving serial communications signal | E04 | | | |
| | | Error in transmitting serial communications signal | E05 | | | |
| | Outdoor unit is detecting error signaled from indoor unit | Error in receiving serial communications signal (including unit quantity verification failure) | E06 | | | |
| | | Error in transmitting serial communications signal | E07 | | | |
| | Automatic address setting failed | Indoor unit capacity too low | E15 | | | |
| | | Indoor unit capacity too high | E16 | | | |
| | | No indoor units connected | E20 | | | |
| | An indoor unit detected trouble in the signal from another indoor unit | Error in transmitting serial communications signal | E17 | ☼ | ● | ● |
| | | Error in receiving serial communications signal | E18 | | | |
| | Communications trouble between units | Communications failure with MDC | E31 | ● | ● | ☼ |
| Mis-setting | Setting error | Indoor unit group settings error | L01 | ☼ | ● | ☼ Simultaneously |
| | | Indoor/outdoor unit type mismatch | L02 | | | |
| | | Main unit duplication in group control (detected by indoor unit) | L03 | | | |
| | | Outdoor unit address duplication (system address) | L04 | ☼ | ○ | ☼ Simultaneously |
| | | Group wiring connected for independent indoor unit | L07 | | | |
| | | Address not set or group not set | L08 | ☼ | ● | ☼ Simultaneously |
| | | Indoor unit capacity not set | L09 | | | |
| | | Outdoor unit capacity not set or setting error | L010 | ☼ | ○ | ☼ Simultaneously |
| | | Miswiring in group control wiring | L011 | | | |
| | | Indoor unit type setting error (capacity) | L013 | | | |

Continued

K

**ON: ○ Blinking: ☼ OFF: ●**

| Possible cause of malfunction | | | Wired remote control display | Wireless remote controller receiver display | | |
|---|---|---|---|---|---|---|
| | | | | Operation | Timer | Standby for heating |
| Ceiling panel connection failure | | | P09 | ● Alternately | ☼ | ☼ |
| Activation of protective device | Indoor protection | Fan protective thermostat | P01 | | | |
| | | Float switch | P10 | | | |
| | Outdoor protection | Discharge temperature trouble | P03 | ☼ Alternately | ● | ☼ |
| | | Open phase detected, AC power trouble | P05 | | | |
| | | No gas | P15 | | | |
| | | 4-way valve locked | P19 | | | |
| | | High cooling load | P20 | | | |
| | | Outdoor fan trouble | P22 | | | |
| | | Inverter compressor trouble (HIC PCB) | P26 | | | |
| | | Inverter compressor trouble (MDC) | P29 | | | |
| | | Simultaneous-operation multi control trouble | P31 | | | |
| | | Compressor current failure (overload) | H01 | ● | ☼ | ● |
| Thermistor fault | Thermistor open circuit • Short circuit (indoor) | Indoor heat exchanger temperature sensor (E1) | F01 | ☼ Alter. | ☼ | ● |
| | | Indoor heat exchanger temperature sensor (E2) | F02 | | | |
| | | Indoor temperature sensor | F10 | | | |
| | Thermistor open circuit • Short circuit (outdoor) | Discharge temperature (TD) | F04 | ☼ Alter. | ☼ | ○ |
| | | Outdoor heat exchanger temperature (C1) | F06 | | | |
| | | Outdoor heat exchanger temperature (C2) | F07 | | | |
| | | Outdoor air temperature (TO) | F08 | | | |
| | | Intake temperature (TS) | F12 | | | |
| | | Indoor EEPROM error | F29 | ☼ Simul. | ☼ | ● |
| | | Outdoor EEPROM error | F31 | ☼ Simul. | ☼ | ○ |

K

(2) LED Indicator Messages on Outdoor Control PCB

| | LED 1 | LED 2 | Remarks |
|---|---|---|---|
| **Power ON sequence** | | | |
| 1. No communication from indoor units in system | ○ | ○ | If it is not possible to advance to 3, repeats 1 → 2. At 3, changes to normal control. |
| 2. Communication received from 1 or more indoor units in system | ● | ● | |
| 3. Regular communication OK (Capacity and unit quantity match) | ● | ● | |
| **Normal operation** | ○ | ☼ | Displayed during automatic address setting 1 and initial communication. After these are completed, alarm F31 is displayed. |
| EEPROM error (F31) | | | |
| Pre-trip (insufficient gas) | ☼ (0.25/0.75) | ● | **P03** |
| Pre-trip (P20) | ☼ (0.75/0.25) | ● | |
| Pre-trip (other) | ☼ | ● | |
| **Alarm** | **Alternate blinking during alarms**<br>LED 1 blinks M times, then LED 2 blinks N times.<br>The cycle then repeats.<br>M = 2: P alarm 3: H alarm 4: E alarm 5: F alarm 6: L alarm<br>N = Alarm No.<br>* Refer to "1. Examples of alarm display" below. | | |
| **Insufficient gas indicator** | ☼ | ● | |
| **Refrigerant recovery mode** | ☼ | ● | |
| **Automatic address setting** | | | |
| Automatic address setting in progress | ☼ | ☼ | Blinking alternately |
| Automatic address setting alarm (E15) | ☼ (0.25/0.75) | ☼ (0.25/0.75) | Blinking simultaneously |
| Automatic address setting alarm (E20) | ☼ (0.75/0.25) | ☼ (0.75/0.25) | Blinking simultaneously |
| Automatic address setting alarm (Other than E15 and E20) | ☼ | ☼ | Blinking simultaneously |

○ : **ON**

☼ : **Blinking (0.25/0.75)** indicates that the lamp illuminates for 0.25 seconds, and then is OFF for 0.75 seconds. Unless otherwise indicated, the blinking is (0.5/0.5).

● : **OFF**

(3) Examples of alarm display (other than E15, E16, and E20)

| Alarm / Display | LED 1 ← Alternately → LED 2 | |
|---|---|---|
| **P03** | ☼ ( Blinks 2 times ) | ☼ (Blinks 3 times) |
| **P04** | ☼ ( " ) | ☼ (Blinks 4 times) |
| **P05** | ☼ ( " ) | ☼ (Blinks 5 times) |
| **P31** | ☼ ( " ) | ☼ (Blinks 31 times) |
| **H01** | ☼ (Blinks 3 times) | ☼ (Blinks 1 times) |
| **H02** | ☼ ( " ) | ☼ (Blinks 2 times) |
| **H03** | ☼ ( " ) | ☼ (Blinks 3 times) |
| • | • | |
| **E04** | ☼ (Blinks 4 times) | ☼ (Blinks 4 times) |
| • | • | |
| **F07** | ☼ (Blinks 5 times) | ☼ (Blinks 7 times) |
| • | 3 | |
| **L13** | ☼ (Blinks 6 times) | ☼ (Blinks 13 times) |
| • | • | |

Note:
This table shows example alarms. Other alarms may also be displayed.

K

## 7. HOW TO PROCESS TUBING

The narrow tubing side is connected by a flare nut, and the wide tubing side is connected by brazing.

### 7-1. Connecting the Refrigerant Tubing

**Use of the Flaring Method**

Many of conventional split system air conditioners employ the flaring method to connect refrigerant tubes which run between indoor and outdoor units. In this method, the copper tubes are flared at each end and connected with flare nuts.

**Flaring Procedure with a Flare Tool**

(1) Cut the copper tube to the required length with a tube cutter. It is recommended to cut approx. 30 – 50 cm longer than the tubing length you estimate.

(2) Remove burrs at each end of the copper tubing with a tube reamer or file. This process is important and should be done carefully to make a good flare. Be sure to keep any contaminants (moisture, dirt, metal filings, etc.) from entering the tubing. (Figs. 7-1 and 7-2)

**NOTE**

When reaming, hold the tube end downward and be sure that no copper scraps fall into the tube. (Fig. 7-2)

(3) Remove the flare nut from the unit and be sure to mount it on the copper tube.

(4) Make a flare at the end of the copper tube with a flare tool.* (Fig. 7-3)

*Use “RIGID®” or equivalent.

**NOTE**

A good flare should have the following characteristics:

- inside surface is glossy and smooth
- edge is smooth
- tapered sides are of uniform length

**Deburring**

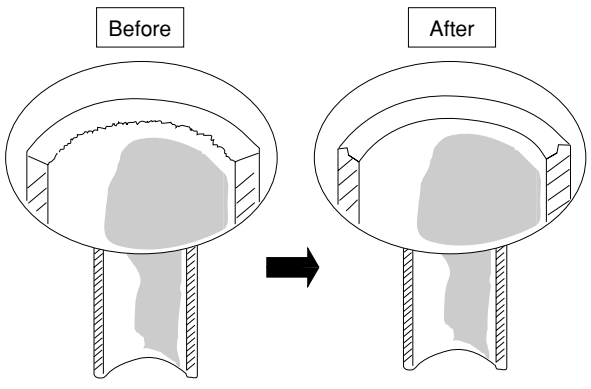


**Fig. 7-1**

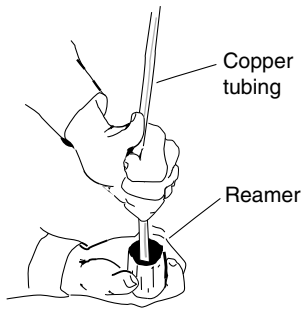


**Fig. 7-2**

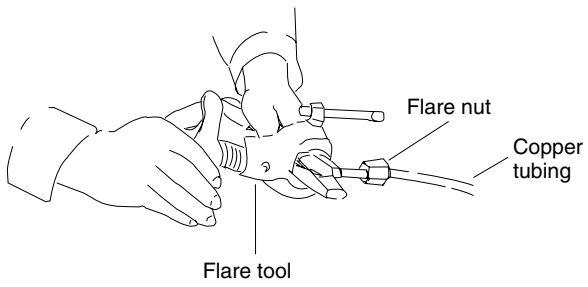


**Fig. 7-3**

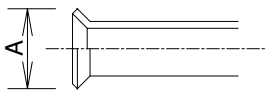


Flare size: A (mm)

| Copper tubing (Outer dia.) | $A^{0}_{-0.4}$ |
|---|---|
| ϕ6.35 | 9.1 |
| ϕ9.52 | 13.2 |
| ϕ12.7 | 16.6 |
| ϕ15.88 | 19.7 |

**Caution Before Connecting Tubes Tightly**

(1) Apply a sealing cap or water-proof tape to prevent dust or water from entering the tubes before they are used.

(2) Be sure to apply refrigerant lubricant to the matching surfaces of the flare and union before connecting them together. This is effective for reducing gas leaks. (Fig. 7-4)

(3) For proper connection, align the union tube and flare tube straight with each other, then screw on the flare nut lightly at first to obtain a smooth match. (Fig. 7-5)

- Adjust the shape of the narrow tube (liquid tube) using a tube bender at the installation site and connect it to the narrow tubing side (liquid tubing side) valve using a flare.

**Cautions During Brazing**

- **Replace air inside the tube with nitrogen gas to prevent copper oxide film from forming during the brazing process. (Oxygen, carbon dioxide and Freon are not acceptable.)**
- **Do not allow the tubing to get too hot during brazing. The nitrogen gas inside the tubing may overheat, causing refrigerant system valves to become damaged. Therefore allow the tubing to cool when brazing.**
- **Use a reducing valve for the nitrogen cylinder.**
- **Do not use agents intended to prevent the formation of oxide film. These agents adversely affect the refrigerant and refrigerant oil, and may cause damage or malfunctions.**

## 7-2. Connecting Tubing Between Indoor and Outdoor Units

(1) Tightly connect the indoor-side refrigerant tubing extended from the wall with the outdoor-side tubing.

(2) To fasten the flare nuts, apply specified torque as at right.

- When removing the flare nuts from the tubing connections, or when tightening them after connecting the tubing, be sure to use 2 monkey wrenches or spanners as shown. (Fig. 7-6)
  If the flare nuts are over-tightened, the flare may be damaged, which could result in refrigerant leakage and cause injury or asphyxiation to room occupants.
- When removing or tightening the wide tube flare nut, use 2 monkey wrenches together: one at the wide tube flare nut, and one at part A. (Fig. 7-7)
- For the flare nuts at tubing connections, be sure to use the flare nuts that were supplied with the unit, or else flare nuts for R410A (type 2). The refrigerant tubing that is used must be of the correct wall thickness as shown in the table at right.

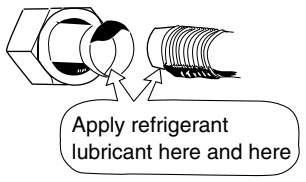


**Fig. 7-4**

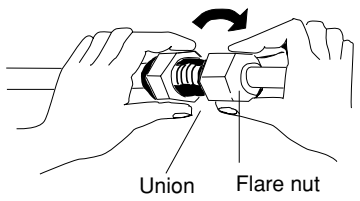


**Fig. 7-5**

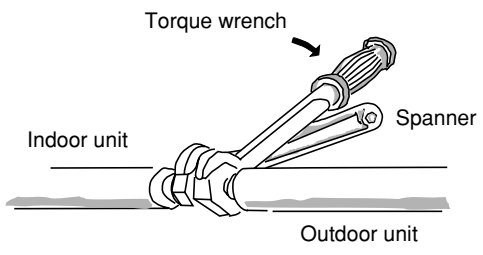


**Fig. 7-6**

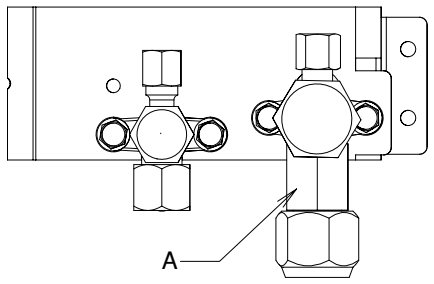


**Fig. 7-7**

| Tube diameter | Tightening torque (approximate) | Tube thickness |
|---|---|---|
| ϕ6.35 (1/4") | 14 – 18 N · m (140 – 180 kgf · cm) | 0.8 mm |
| ϕ9.52 (3/8") | 34 – 42 N · m (340 – 420 kgf · cm) | 0.8 mm |
| ϕ12.7 (1/2") | 49 – 61 N · m (490 – 610 kgf · cm) | 0.8 mm |
| ϕ15.88 (5/8") | 68 – 82 N · m (680 – 820 kgf · cm) | 1.0 mm |

Because the pressure is approximately 1.6 times higher than conventional refrigerant pressure, the use of ordinary flare nuts (type 1) or thin-walled tubes may result in tube rupture, injury, or asphyxiation caused by refrigerant leakage.

- In order to prevent damage to the flare caused by over-tightening of the flare nuts, use the table above as a guide when tightening.
- When tightening the flare nut on the narrow tube, use a monkey wrench with a nominal handle length of 200 mm.

- Do not use a spanner to tighten the valve stem caps. Doing so may damage the valves.
- Depending on the installation conditions, applying excessive torque may cause the nuts to crack.

**Precautions for Packed Valve Operation**

- If the packed valve is left for a long time with the valve stem cap removed, refrigerant will leak from the valve. Therefore, do not leave the valve stem cap removed.
- Use a torque wrench to securely tighten the valve stem cap.
- Valve stem cap tightening torque:

| | |
|---|---|
| Charging port | 8 – 10 N • m (80 – 100 kgf • cm) |
| ϕ9.52 (Narrow side) | 19 – 21 N • m (190 – 210 kgf • cm) |
| ϕ15.88 (Wide side) | 28 – 32 N • m (280 – 320 kgf • cm) |

## 7-3. Insulating the Refrigerant Tubing

**Tubing Insulation**

- Thermal insulation must be applied to all unit tubing, including distribution joint (purchased separately).
  * For gas tubing, the insulation material must be heat resistant to 120°C or above. For other tubing, it must be heat resistant to 80°C or above.
  Insulation material thickness must be 10 mm or greater.
  If the conditions inside the ceiling exceed DB 30°C and RH 70%, increase the thickness of the gas tubing insulation material by 1 step.

**CAUTION**

**If the exterior of the outdoor unit valves has been finished with a square duct covering, make sure you allow sufficient space to access the valves and to allow the panels to be attached and removed.**

**Taping the flare nuts**

Wind the white insulation tape around the flare nuts at the wide tube connections. Then cover up the tubing connections with the flare insulator, and fill the gap at the union with the supplied black insulation tape. Finally, fasten the insulator at both ends with the supplied vinyl clamps. (Fig. 7-10)

**Insulation material**

The material used for insulation must have good insulation characteristics, be easy to use, be age resistant, and must not easily absorb moisture.

**CAUTION**

**After a tube has been insulated, never try to bend it into a narrow curve because it can cause the tube to break or crack.**

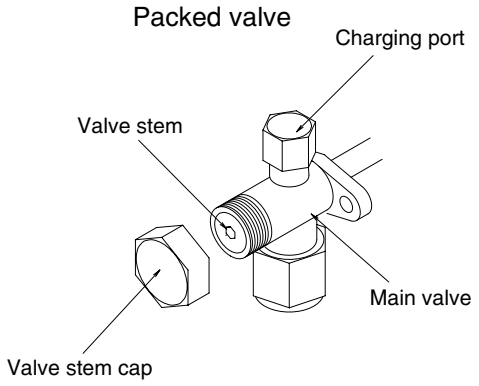


**Fig. 7-8**

**Two tubes arranged together**

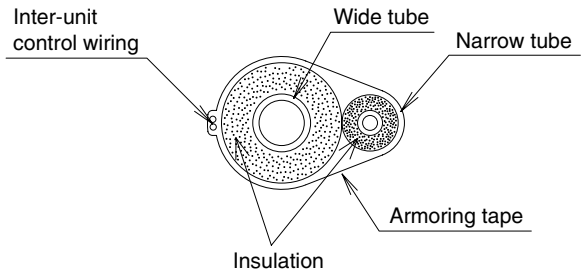


**Fig. 7-9**

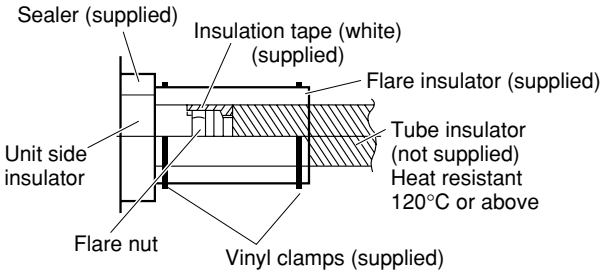


**Fig. 7-10**

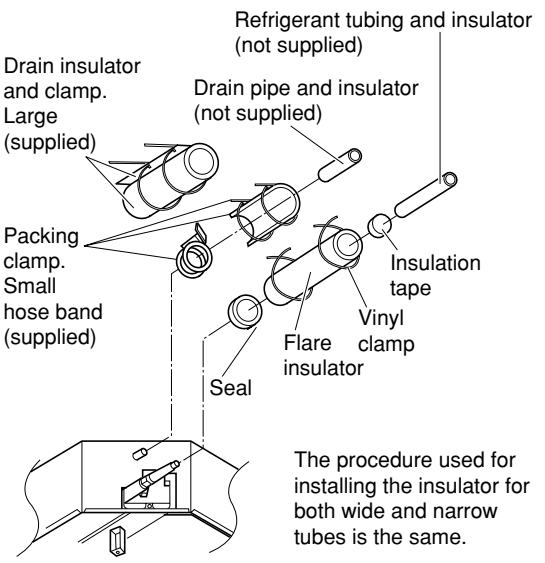


**Fig. 7-11**

**Never grasp the drain or refrigerant connecting outlets when moving the unit.**

### 7-4. Taping the Tubes

(1) At this time, the refrigerant tubes (and electrical wiring if local codes permit) should be taped together with armoring tape in 1 bundle. To prevent condensation from overflowing the drain pan, keep the drain hose separate from the refrigerant tubing.

(2) Wrap the armoring tape from the bottom of the outdoor unit to the top of the tubing where it enters the wall. As you wrap the tubing, overlap half of each previous tape turn.

(3) Clamp the tubing bundle to the wall, using 1 clamp approx. each meter. (Fig. 7-12)

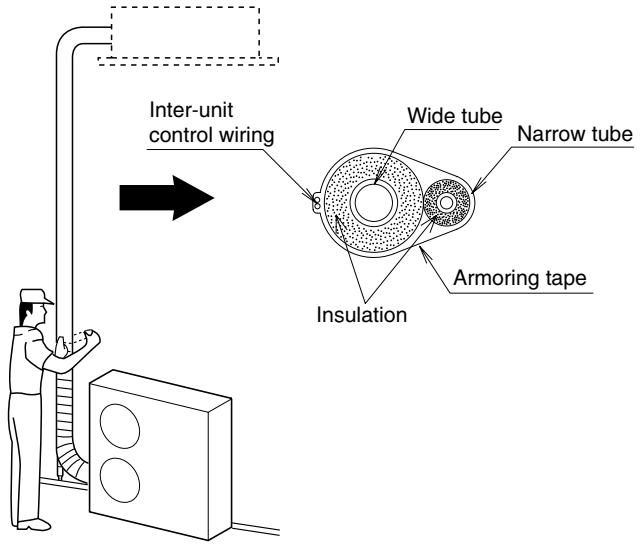


**Fig. 7-12**

**NOTE**

Do not wind the armoring tape too tightly since this will decrease the heat insulation effect. Also ensure that the condensation drain hose splits away from the bundle and drips clear of the unit and the tubing.

### 7-5. Finishing the Installation

After finishing insulating and taping over the tubing, use sealing putty to seal off the hole in the wall to prevent rain and draft from entering. (Fig. 7-13)

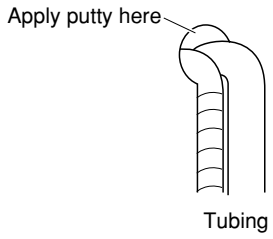


**Fig. 7-13**

GRFP

## 8. LEAK TEST, EVACUATION AND ADDITIONAL REFRIGERANT CHARGE

- Perform an air-tightness test for this package A/C. Check that there is no leakage from any of the connections.
  Air and moisture in the refrigerant system may have undesirable effects as indicated below.
- pressure in the system rises
- operating current rises
- cooling (or heating) efficiency drops
- moisture in the refrigerant circuit may freeze and block capillary tubing
- water may lead to corrosion of parts in the refrigerant system

Therefore, the indoor unit and tubing between the indoor and outdoor unit must be leak tested and evacuated to remove any noncondensables and moisture from the system.

### ■ Air Purging with a Vacuum Pump (for Test Run) Preparation

Check that each tube (both narrow and wide tubes) between the indoor and outdoor units has been properly connected and all wiring for the test run has been completed. Remove the valve caps from both the wide and narrow service valves on the outdoor unit. Note that both narrow and wide tube service valves on the outdoor unit are kept closed at this stage.

- The refrigerant charge at the time of shipment is only guaranteed sufficient for a tubing length of up to 30 m. The tubing may exceed this length, up to the maximum permitted length; however, an additional charge is necessary for the amount that the tubing exceeds 30 m. (No additional refrigerating machine oil is needed.)

#### 8-1. Leak Test

(1) With the service valves on the outdoor unit closed, remove the 1/4 in. flare nut and its bonnet on the wide tube service valve. (Save for reuse.)

(2) Attach a manifold valve (with pressure gauges) and dry nitrogen gas cylinder to this service port with charge hoses.

**CAUTION**

**Use a manifold valve for air purging. If it is not available, use a stop valve for this purpose. The "Hi" knob of the manifold valve must always be kept closed.**

**Manifold gauge**

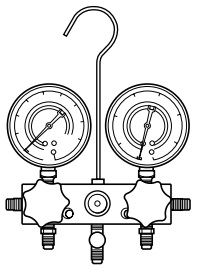

**Fig. 8-1**

**Vacuum pump**

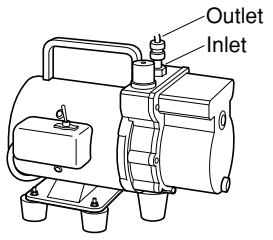


**Fig. 8-2**

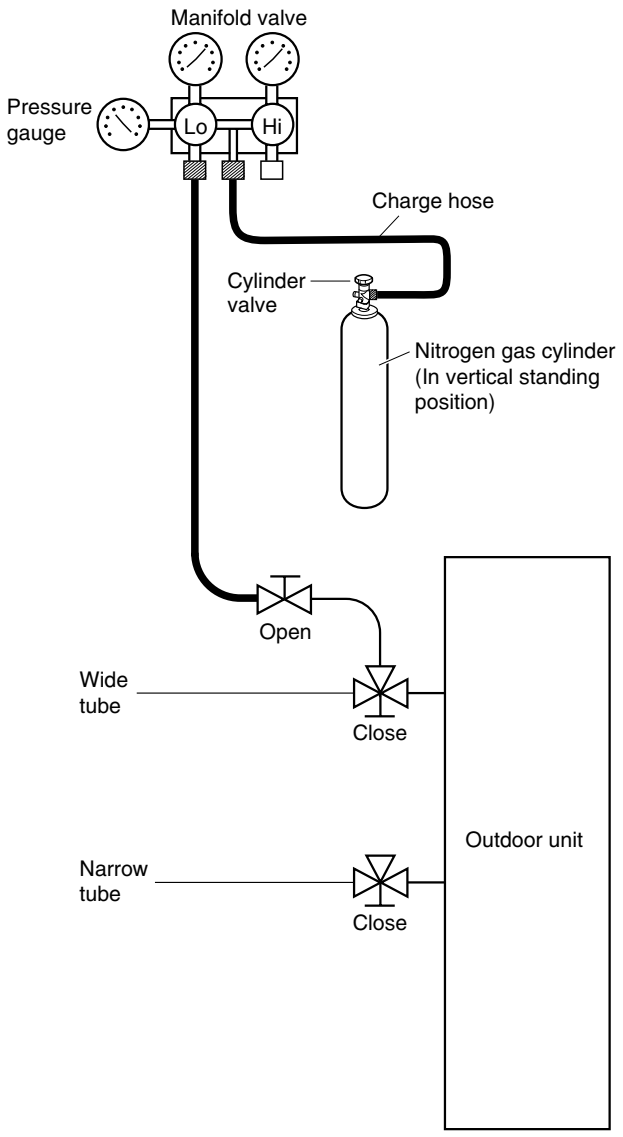


**Fig. 8-3**

GRFP

(3) Pressurize the system up to 4.15 MPa (42 kgf/cm$^2$G) with dry nitrogen gas and close the cylinder valve when the gauge reading reaches 4.15 MPa (42 kgf/cm$^2$G). Then, test for leaks with liquid soap.

**CAUTION**

**To avoid nitrogen entering the refrigerant system in a liquid state, the top of the cylinder must be higher than the bottom when you pressurize the system. Usually, the cylinder is used in a vertical standing position.**

(4) Do a leak test of all joints of the tubing (both indoor and outdoor) and both wide and narrow service valves. Bubbles indicate a leak. Wipe off the soap with a clean cloth after a leak test.

(5) After the system is found to be free of leaks, relieve the nitrogen pressure by loosening the charge hose connector at the nitrogen cylinder. When the system pressure is reduced to normal, disconnect the hose from the cylinder.

### 8-2. Evacuation

Be sure to use a vacuum pump that includes a function for prevention of back-flow, in order to prevent back-flow of pump oil into the unit tubing when the pump is stopped.

- Perform vacuuming of the indoor unit and tubing. Connect the vacuum pump to the wide tube valve and apply vacuum at a pressure of –755 mmHg (5 torr) or below.
  Continue vacuum application for a minimum of 1 hour after the pressure reaches –755 mmHg.)

(1) Attach the charge hose end described in the preceding steps to the vacuum pump to evacuate the tubing and indoor unit. Confirm that the “Lo” knob of the manifold valve is open. Then, run the vacuum pump.

(2) When the desired vacuum is reached, close the “Lo” knob of the manifold valve and turn off the vacuum pump. Confirm that the gauge pressure is under 667 Pa (–755 mmHg, 5 Torr) after 4 to 5 minutes of vacuum pump operation.

**CAUTION**

**Use a cylinder specifically designed for use with R410A.**

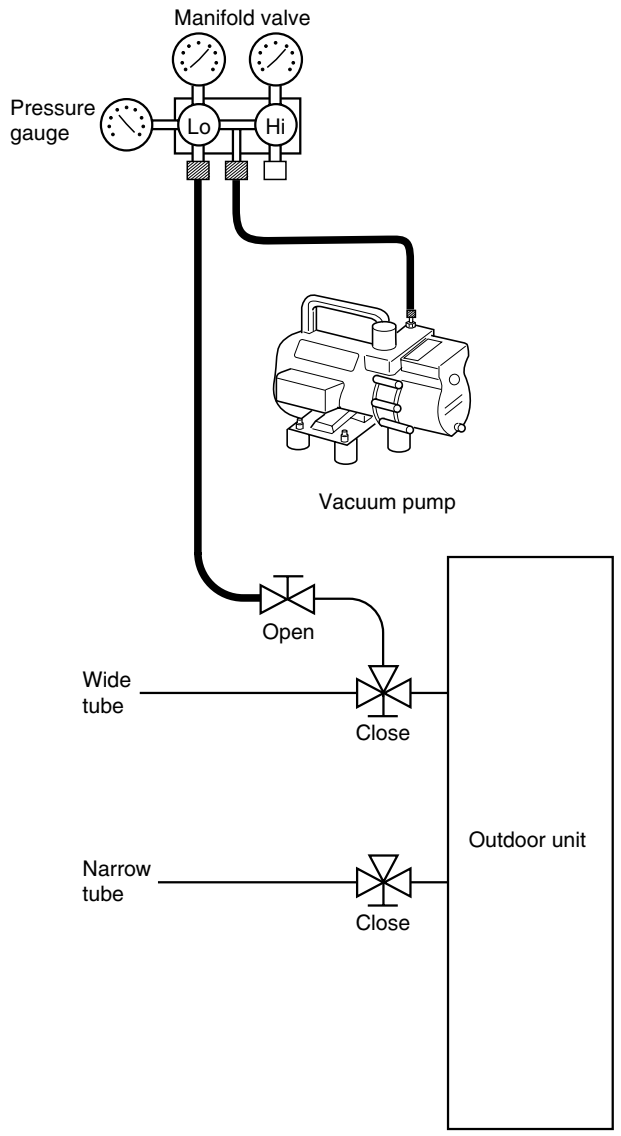


**Fig. 8-4**

GRFP

### 8-3. Charging Additional Refrigerant

- Charging additional refrigerant (calculated from the narrow tube length as shown in P. 12, Amount of additional refrigerant charge) using the narrow tube service valve. (Fig. 8-5)
- Use a balance to measure the refrigerant accurately.
- If the additional refrigerant charge amount cannot be charged at once, charge the remaining refrigerant in liquid form by using the wide tube service valve with the system in Cooling mode at the time of test run. (Fig. 8-6)

* If an additional refrigerant charge has been performed, list the refrigerant tubing length and amount of additional refrigerant charge on the product label (inside the panel).

### 8-4. Finishing the Job

(1) With a hex wrench, turn the narrow tube service valve stem counter-clockwise to fully open the valve.

(2) Turn the wide tube service valve stem counter-clockwise to fully open the valve.

**CAUTION**

**To avoid gas from leaking when removing the charge hose, make sure the stem of the wide tube is turned all the way out ("BACK SEAT" position.**

(3) Loosen the charge hose connected to the wide tube service port (5/16 in.) slightly to release the pressure, then remove the hose.

(4) Replace the 5/16 in. flare nut and its bonnet on the wide tube service port and fasten the flare nut securely with an adjustable wrench or box wrench. This process is very important to prevent gas from leaking from the system.

(5) Replace the valve caps at both wide and narrow service valves and fasten them securely.

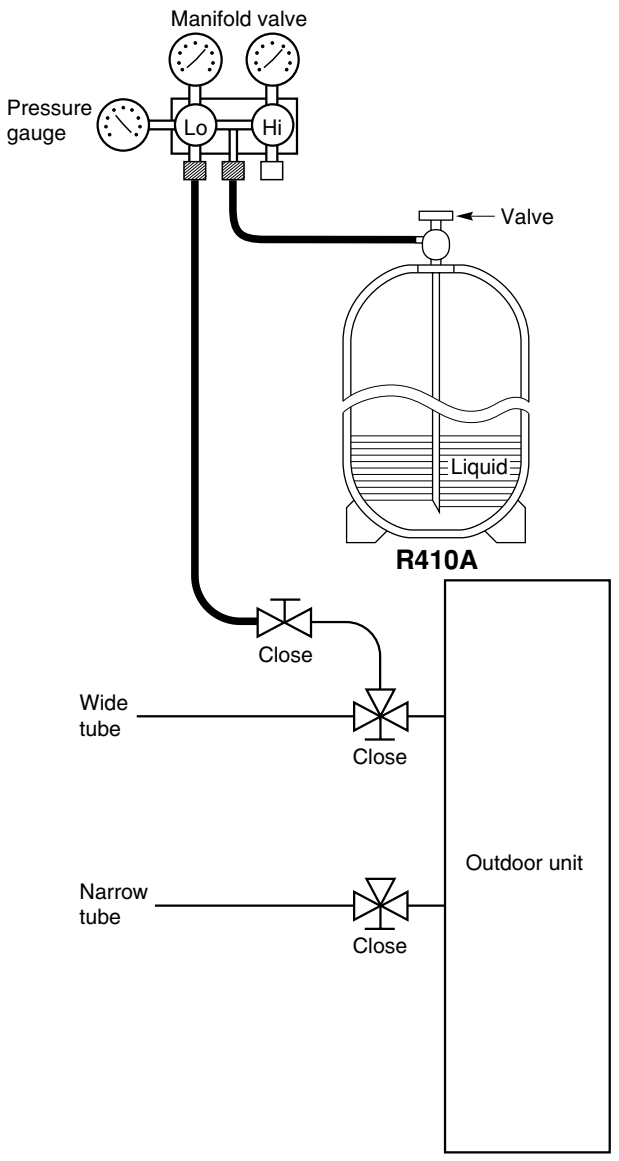


Fig. 8-5

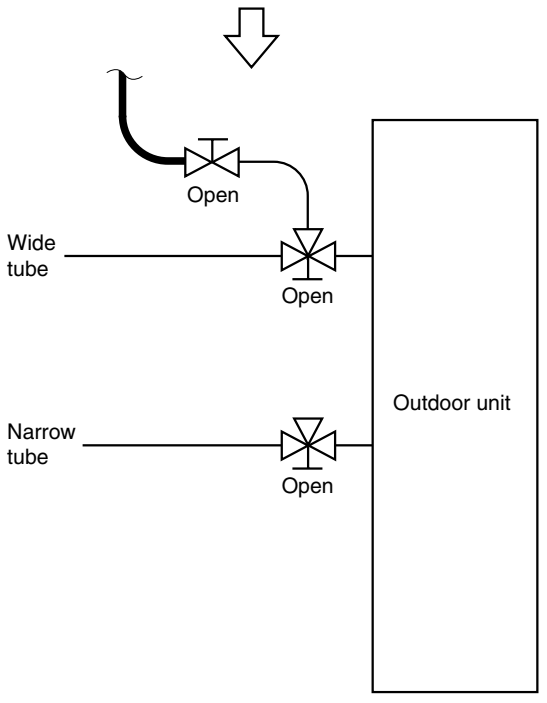


Fig. 8-6

GRFP

## 9. HOW TO INSTALL THE CEILING PANEL

### ■ 4-Way Air Discharge Semi-Concealed Type (CAFP Type)

**Checking the unit position**

(1) Check that the ceiling hole is within this range: 860 × 860 to 910 × 910 mm

(2) Use the full-scale installation diagram (from the packaging) that was supplied with the unit to determine the positioning of the unit on the ceiling surface. If the positions of the ceiling surface and unit do not match, air leakage, water leakage, flap operation failure, or other problems may result.

CAFP

**CAUTION**

- **Never place the panel face-down. Either hang it vertically or place it on top of a projecting object. Placing it face-down will damage the surface.**
- **Do not touch the flap or apply force to it. (This may cause flap malfunction.)**

Ⓐ must be within the range of 12 – 17 mm.
If not within this range, malfunction or other trouble may result.

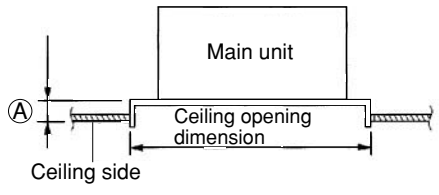


**Fig. 9-1**

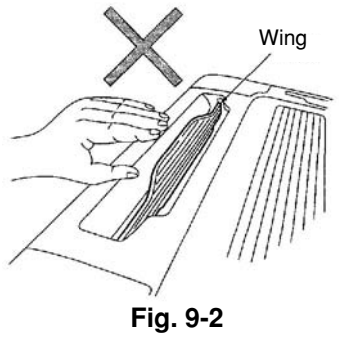


**Fig. 9-2**

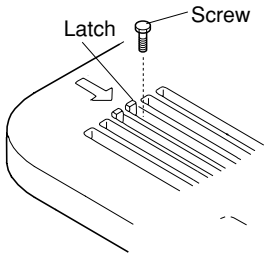


**Fig. 9-3**

### 9-1. Before Installing the Ceiling Panel

(1) Remove the air-intake grille and air filter from the ceiling panel. (Figs. 9-3, 9-4 and 9-5)

a) Remove the 2 screws on the latch of the air-intake grille. (Fig. 9-3)

b) Slide the air-intake grille catches in the direction shown by the arrows ① to open the grille. (Fig. 9-4)

c) With the air-intake grille opened, remove the grille hinge from the ceiling panel by sliding it in the direction shown by the arrow ② . (Fig. 9-5)

(2) Removing the corner cover

a) Slide the corner cover to the direction shown by the arrow ① to remove the corner cover. (Fig. 9-6).

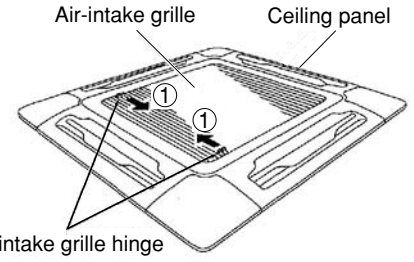


**Fig. 9-4**

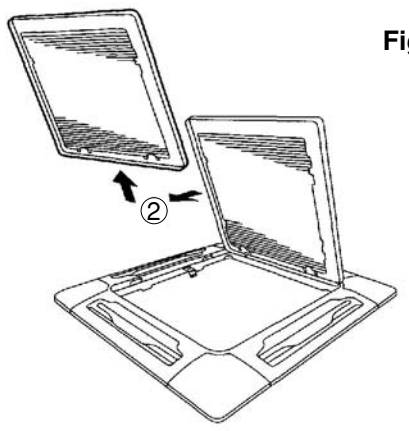


**Fig. 9-5**

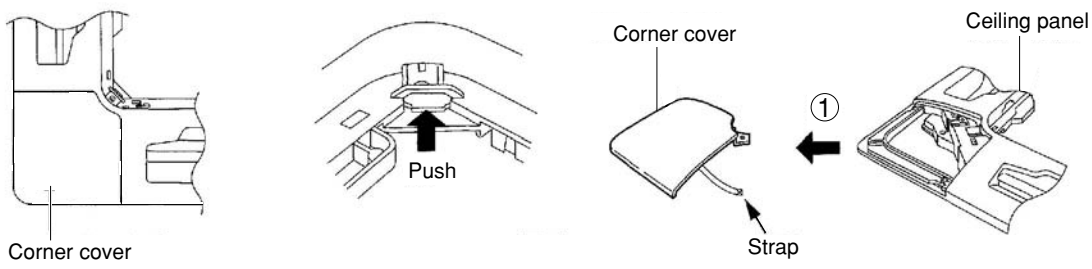


**Fig. 9-6**

### 9-2. Installing the Ceiling Panel

The power must be turned ON in order to change the flap angle. (Do not attempt to move the flap by hand. Doing so may damage the flap.)

(1) Insert the temporary fasteners (stainless steel) on the inside of the ceiling panel into the square holes on the unit to temporarily fasten the ceiling panel in place. (Fig. 9-7)

- The ceiling panel must be installed in the correct direction relative to the unit. Align the REF. PIPE and DRAIN marks on the ceiling panel corner with the correct positions on the unit.
- To remove the ceiling panel, support the ceiling panel while pressing the temporary fasteners toward the outside. (Fig. 9-7)

(2) Align the panel installation holes and the unit screw holes.

(3) Tighten the supplied washer head screws at the 4 panel installation locations so that the panel is attached tightly to the unit. (Fig. 9-8)

(4) Check that the panel is attached tightly to the ceiling.

- At this time, make sure that there are no gaps between the unit and the ceiling panel, or between the ceiling panel and the ceiling surface. (Fig. 9-9)

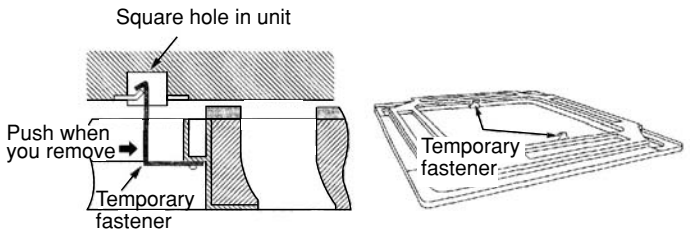


**Fig. 9-7**

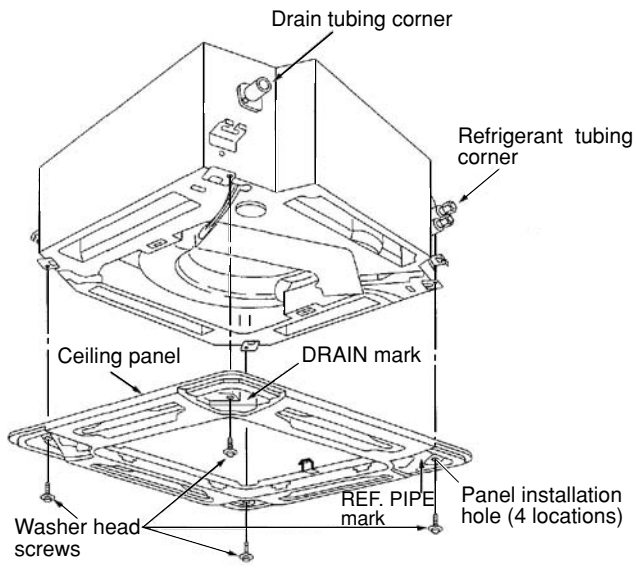


**Fig. 9-8**

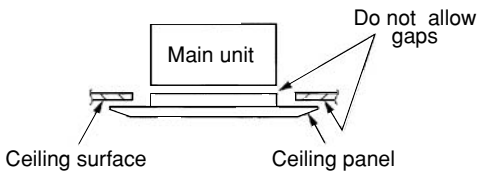


**Fig. 9-9**

- If there is a gap between the panel and the ceiling, leave the ceiling panel attached and make fine adjustments to the installation height of the unit to eliminate the gap with the ceiling. (Fig. 9-10)

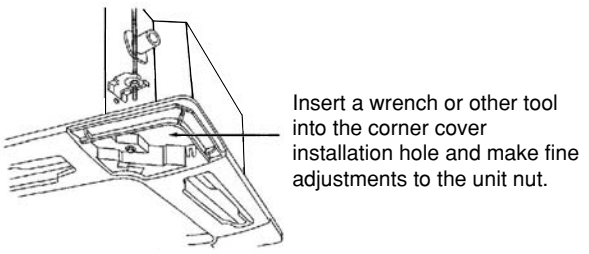


**Fig. 9-10**

**CAUTION**

- If the screws are not sufficiently tightened, trouble such as that shown in the figure below may occur. Be sure to tighten the screws securely.

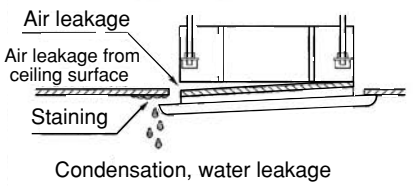


- If a gap remains between the ceiling surface and the ceiling panel even after the screws are tightened, adjust the height of the unit again.

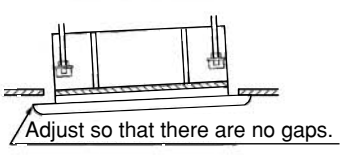


The height of the unit can be adjusted from the ceiling panel corner hole, with the ceiling panel attached, to an extent that does not affect the unit levelness, the drain hose, or other elements.

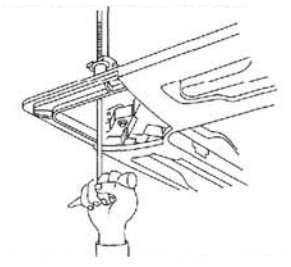

**Fig. 9-11**

### 9-3. Wiring the Ceiling Panel

(1) Open the cover of the electrical component box.

(2) Connect the 7P wiring connector (red) from the ceiling panel to the connector in the unit electrical component box.

- If the connectors are not connected, Auto flap will not operate. Be sure to connect them securely.
- Check that the wiring connector is not caught between the electrical component box and the cover.
- Check that the wiring connector is not caught between the unit and the ceiling panel.

(Direction that the unit faces has been changed to facilitate explanation.)

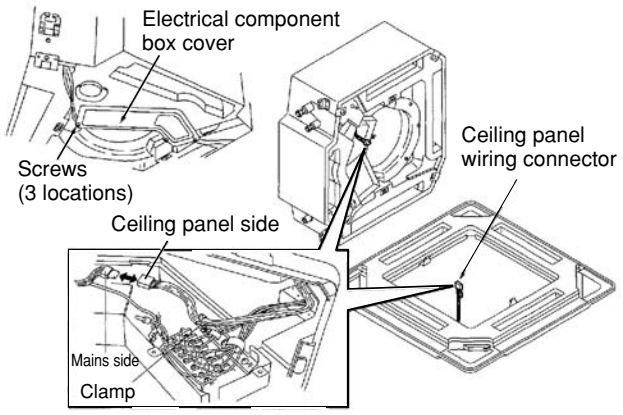


* Pass the wiring connector through the clamp to fasten it in place, as shown in the figure.

**Fig. 9-12**

### 9-4. How to Attach the Corner & Air Intake Grille

**CAFP**

**Attaching the corner cover and air-intake grille**

A. Attaching the corner cover

(1) Check that the safety cord from the corner cover is fastened to the ceiling panel pin, as shown in the figure.

(2) Use the supplied screws to attach the corner cover to the ceiling panel.

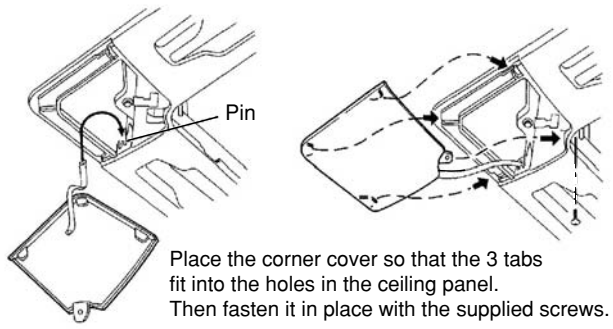


Place the corner cover so that the 3 tabs fit into the holes in the ceiling panel. Then fasten it in place with the supplied screws.

**Fig. 9-13**

B. Attaching the air-intake grille

- To install the air-intake grille, follow the steps for **Removing the grille** in the reverse order. By rotating the air-intake grille, it is possible to attach the grille onto the ceiling panel from any of 4 directions. Coordinate the directions of the air-intake grilles when installing multiple units, and change the directions according to customer requests.
- **When attaching the air-intake grille, be careful that the flap lead wire does not become caught.**
- **Be sure to attach the safety cord to the ceiling panel unit as shown in the figure at right. This keeps the air intake grille from accidentally dropping**

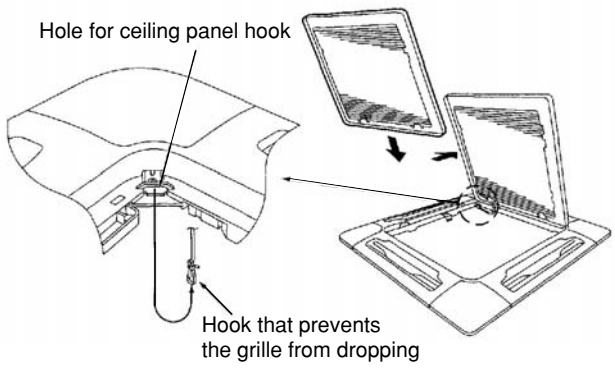


**Fig. 9-14**

- With this ceiling panel, the directions of the air-intake grille lattices when installing multiple units, and the position of the label showing the company name on the corner panel, can be changed according to customer requests, as shown in the figure below. However, the optional wireless receiver kit can only be installed at the refrigerant-tubing corner of the ceiling unit.

Locations of the air-intake grille catches at the time the product is shipped.
* The grille can be installed with these catches facing in any of 4 directions.

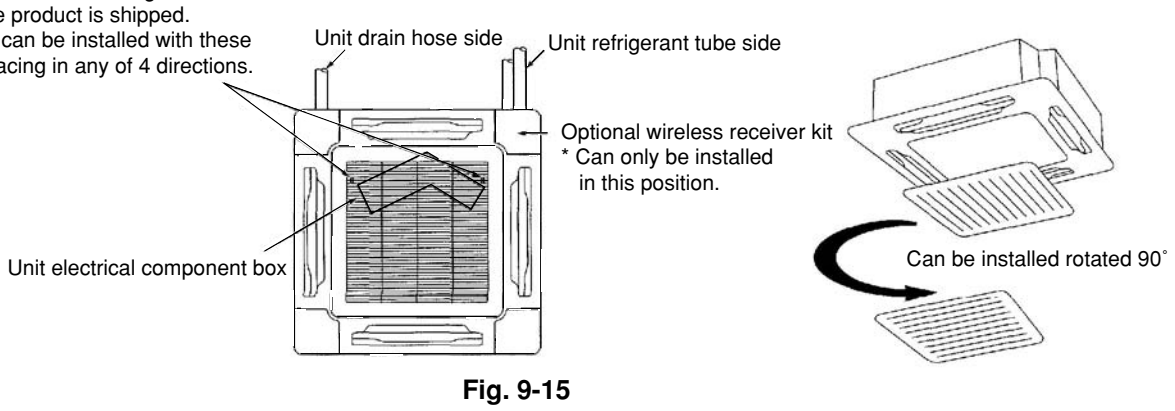


**Fig. 9-15**

### 9-5. Checking After Installation

- Check that there are no gaps between the unit and the ceiling panel, or between the ceiling panel and the ceiling surface.
  Gaps may cause water leakage and condensation.
- Check that the wiring is securely connected.
  If it is not securely connected, the auto flap will not operate. (“P09” is displayed on the remote controller.) In addition, water leakage and condensation may occur.

### 9-6. When Removing the Ceiling Panel for Servicing

When removing the ceiling panel for servicing, remove the air-intake grille and air filter, disconnect the wiring connector inside the electrical component box, and then remove the 4 mounting screws.

### 9-7. Adjusting the Auto Flap

The air-direction louver on the ceiling panel outlet can be adjusted as follows.

- Adjust the louver to the desired angle using the remote controller. The louver also has an automatic air-sweeping mechanism.

**NOTE**

- Never attempt to move the louver by hand.
- Proper air flow depends on the location of the air conditioner, the layout of the room and furniture, etc. If cooling or heating seems inadequate, try changing the direction of the air flow.

# 10. TEST RUN

## 10-1. Preparing for Test Run

- **Before attempting to start the air conditioner, check the following:**

(1) All loose matter is removed from the cabinet especially steel filings, bits of wire, and clips.

(2) The control wiring is correctly connected and all electrical connections are tight.

(3) The protective spacers for the compressor used for transportation have been removed. If not, remove them now.

(4) The transportation pads for the indoor fan have been removed. If not, remove them now.

(5) The power has been supplied to the unit for at least 5 hours before starting the compressor. The bottom of the compressor should be warm to the touch and the crankcase heater around the feet of the compressor should be hot to the touch. (Fig. 10-1)

(6) Both the wide and narrow tube service valves are open. If not, open them now. (Fig. 10-2)

(7) Request that the customer be present for the trial run.
Explain the contents of the instruction manual, then have the customer actually operate the system.

(8) Be sure to give the instruction manual and warranty certificate to the customer.

(9) When replacing the control PCB, be sure to make all the same settings on the new PCB as were in use before replacement.
The existing EEPROM is not changed, and is connected to the new control PCB.

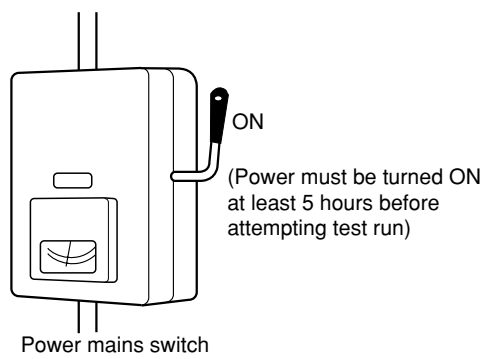


**Fig. 10-1**

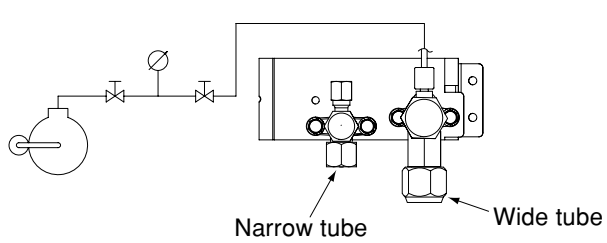


**Fig. 10-2**

## ■ CAFP, SPAFP, DSAFP Type

### 10-2. Caution

- **This unit may be used in a single-type refrigerant system where 1 outdoor unit is connected to 1 indoor unit, and also in a system where 1 outdoor unit is connected to multiple indoor units (maximum 4).**
  * If multiple indoor units are used, also refer to 10-8. System Control.
- **The indoor and outdoor unit control PCBs utilize a semiconductor memory element (EEPROM). The settings required for operation were made at the time of shipment.**
  **Only the correct combinations of indoor and outdoor units can be used.**
- **This test run manual describes primarily the procedure when using the wired remote controller.**

### 10-3. Test Run Procedure

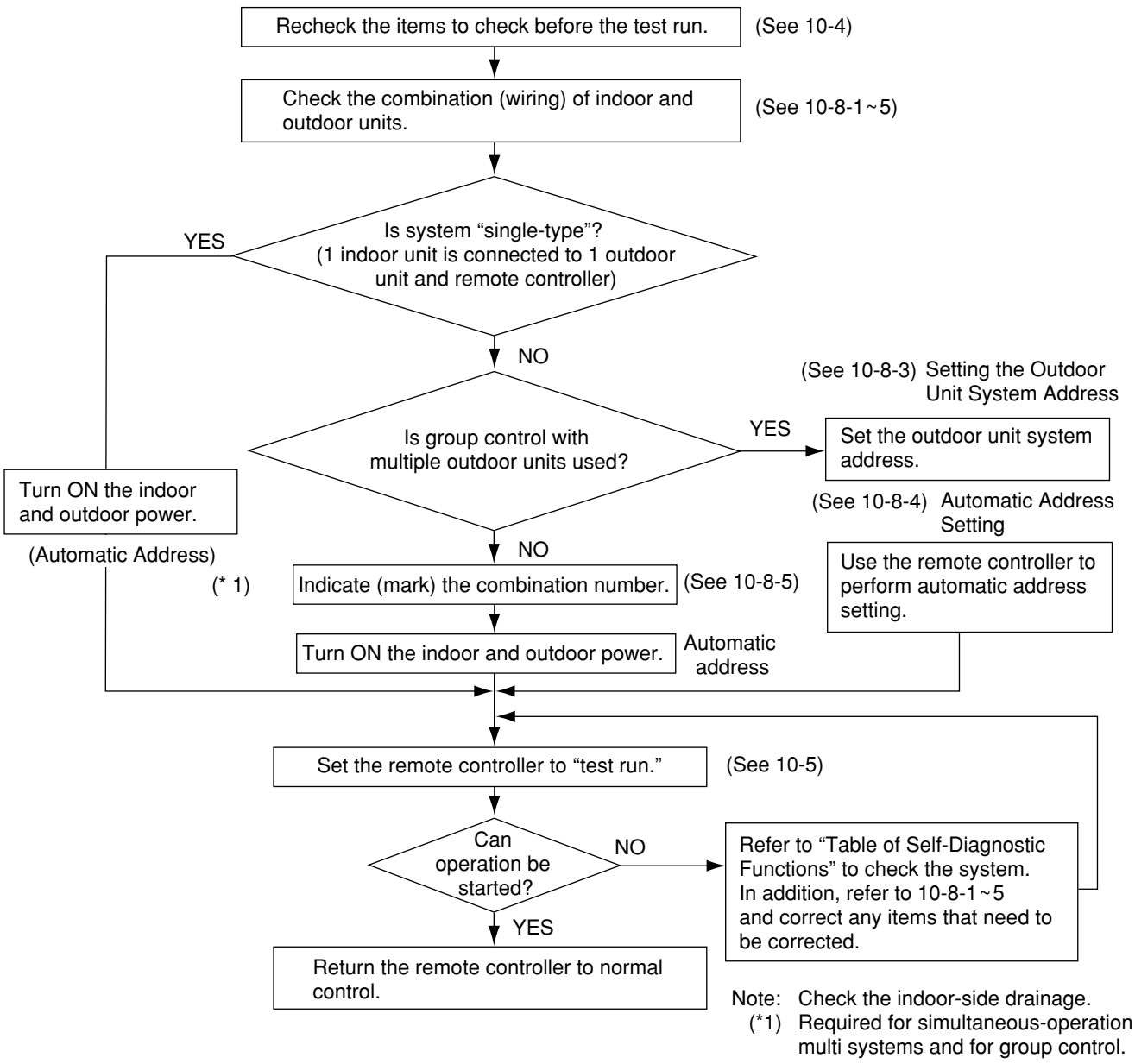


**Fig. 10-3**

### 10-4. Items to Check Before the Test Run

(1) Turn the remote power switch ON at least 12 hours in advance in order to energize the crank case heater.

(2) Fully open the closed valves on the narrow-tube and wide-tube sides.

### 10-5. Test Run Using the Remote Controller

(1) Press and hold the remote controller button for 4 seconds or longer. Then press the button.

- "TEST" appears in the LCD display during the test run.
- Temperature control is not possible when test run mode is engaged.
  (This mode places a large load on the devices. Use it only when performing the test run.)

(2) Use either Heating or Cooling mode to perform the test run.
Note: The outdoor unit will not operate for approximately 3 minutes after the power is turned ON or after it stops operating.

(3) If normal operation is not possible, a code appears on the remote controller LCD display.
Refer to the "Table of Self-Diagnostic Functions and Corrections" on the next page, and correct the problem.

(4) After the test run is completed, press the button again. Check that "TEST" disappears from the LCD display.
(This remote controller includes a function that cancels test run mode after a 60-minute timer has elapsed, in order to prevent continuous test run operation.)

(5) For the test run of an inverter outdoor unit, operate the compressors for a minimum of 10 minutes (in order to check for open phase).
* When performing a test run using a wired remote controller, operation is possible without attaching the cassette-type ceiling panel.
("P09" will not be displayed.)

### 10-6. Precautions

- Request that the customer be present when the test run is performed. At this time, explain the operation manual and have the customer perform the actual steps.
- Be sure to pass the manuals and warranty certificate to the customer.
- Check that the AC 220 – 240 V power is not connected to the inter-unit control wiring connector terminal.

  * If AC 220 – 240 V is accidentally applied, the indoor or outdoor unit control PCB fuse (0.5 A for both indoor and outdoor units) will blow in order to protect the PCB. Correct the wiring connections, then disconnect the 2P connectors (indoor: blue, DC) (outdoor: blue, serial 1) that are connected to the PCB, and replace them with 2P connectors (indoor: brown, EMG) (outdoor: brown, serial 2). (Refer to the figure below.) If operation is still not possible after changing the brown connectors, try cutting the varistor (black) (both indoor and outdoor).
  (Be sure to turn the power OFF before performing this work.)

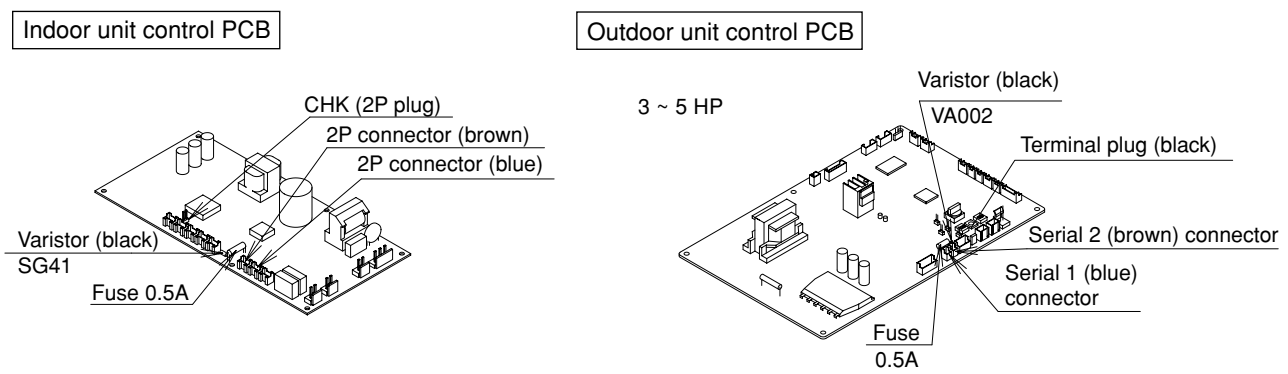


**Fig. 10-4**

## 10-7. Table of Self-Diagnostic Functions and Corrections (CAFP, SPAFP, DSAFP, MAFP Type)

| Wired remote controller display | Indoor unit receiver lamp | Cause | | | | Correction |
|---|---|---|---|---|---|---|
| | | 1:1 connection (single type) | Group connection | Simultaneous-operation multi system (flexible combination) | Control by main-sub remote controllers | |
| Nothing is displayed | Nothing is displayed | • Remote controller is not connected correctly.<br>• Indoor unit power is not ON. | • Remote controller is not connected with indoor unit correctly<br>• Indoor unit power is not ON. | • Same as in the left | • Same as in the left | Connect the remote controller correctly.<br>Turn ON the indoor unit power. |
| **E 0 1** displayed | Operating lamp is blinking. | • Automatic address setting has not been completed.<br>• Inter-unit control wiring is cut or is not connected correctly.<br>• Remote controller is not connected correctly (remote controller receiving failure). | • Automatic address setting has not been completed.<br>• Inter-unit control wiring is cut or is not connected correctly.<br>• Remote controller is not connected with indoor unit correctly | • Same as in the left | • Same as in the left | Check the remote controller and inter-unit control wiring.<br>Perform automatic address setting (See 10-8-4). |
| **E 0 2** displayed | | • Remote controller is not connected correctly (failure in transmission from remote controller to indoor unit). | • Remote controller is not connected with indoor unit correctly | • Same as in the left | • Same as in the left | Connect the remote controller correctly. |
| **E 0 9** displayed | | ——— | ——— | ——— | • 2 remote controllers are set as the main remote controller. | Refer to 10-8-6 Main-sub remote Control, and make the correct settings. |
| **E 1 4** displayed | | ——— | ——— | • Remote controller crossover wiring is cut or is not connected correctly. | • Same as in the left | Check the remote controller crossover wiring.<br>Perform automatic address setting again. |
| **E 0 4** displayed | Standby lamp is blinking. | • Indoor-outdoor inter-unit wiring is not connected correctly. | • Same as in the left | • Same as in the left | • Same as in the left | Connect the wiring correctly. |
| **E 0 5** displayed | | | • Indoor-outdoor inter-unit wiring is cut or is not connected correctly. | • Same as in the left | • Same as in the left | Refer to 10-8 System Control, and make the correct settings. |
| **E 1 5** displayed | | • Indoor unit capacity is too low. | • Same as in the left | • Same as in the left | • Same as in the left | Check that the total capacities of the indoor and outdoor units are appropriate. |
| **E 1 6** displayed | | • Indoor unit capacity is too high. | | | | |
| **E 2 0** displayed | | • No serial signal is being received at all from the indoor units. | | | | Check that the indoor unit power is ON, and that the inter-unit control wiring is connected correctly. |
| **P 0 5** displayed | Operation lamp and Standby lamp are blinking alternately. | • Reversed phase or open phase in the outdoor unit 3-phase power<br>• Insufficient gas | • Reversed phase or open phase in the 3-phase power at one of the outdoor units in the group | • Reversed phase or open phase in the outdoor unit 3-phase power | • Same as in the left | Reverse 2 phases of the outdoor unit 3-phase power and connect them correctly. |
| **L 0 2** displayed<br>**L 1 3** displayed | Both the Operation lamp and Standby lamp are blinking together. | • Indoor-outdoor unit type mismatch | • Same as in the left | • Same as in the left | ——— | Check that the indoor and outdoor unit types are correct. |
| **L 0 7** displayed | | ——— | ——— | • Remote controller crossover wiring is connected to the indoor unit, however it is set for individual operation. | • Same as in the left | Perform automatic address setting (See 10-8). |
| **P 0 9** displayed | Timer lamp and Standby lamp are blinking alternately. | • The indoor unit ceiling panel connector is not connected correctly. | • Ceiling panel connector at one of the indoor units in the group is not connected correctly. | • Indoor unit ceiling panel connector is not connected correctly. | • Same as in the left | Connect the indoor unit ceiling panel connector correctly. |
| **P 1 2** displayed | | • Indoor unit DC fan trouble | • DC fan trouble at one of the indoor units in the group | • Indoor unit fan trouble | • Same as in the left | Check whether the fan holder is loose.<br>Check the wiring between the DC fan and the PCB. |



04-393 DC INV Tech p 64-110 12/13/04 11:35 AM Page 67

## 10-8. System Control

System control refers to connecting link wiring for control, for simultaneous-operation multi systems, group control, and main-sub remote controller control.

### 10-8-1. Basic wiring diagram 1

Single type and simultaneous-operation multi system

- Simultaneous-operation multi system
  Up to 4 (Double-Twin) indoor units can be connected to 1 outdoor unit for operation.
  (However, coordinate the outdoor unit capacity and the total capacity of the indoor units.)
  (It is not possible to connect individual remote controllers for independent operation.)
- Be careful to avoid miswiring when connecting the wires. (Miswiring will damage the units.)

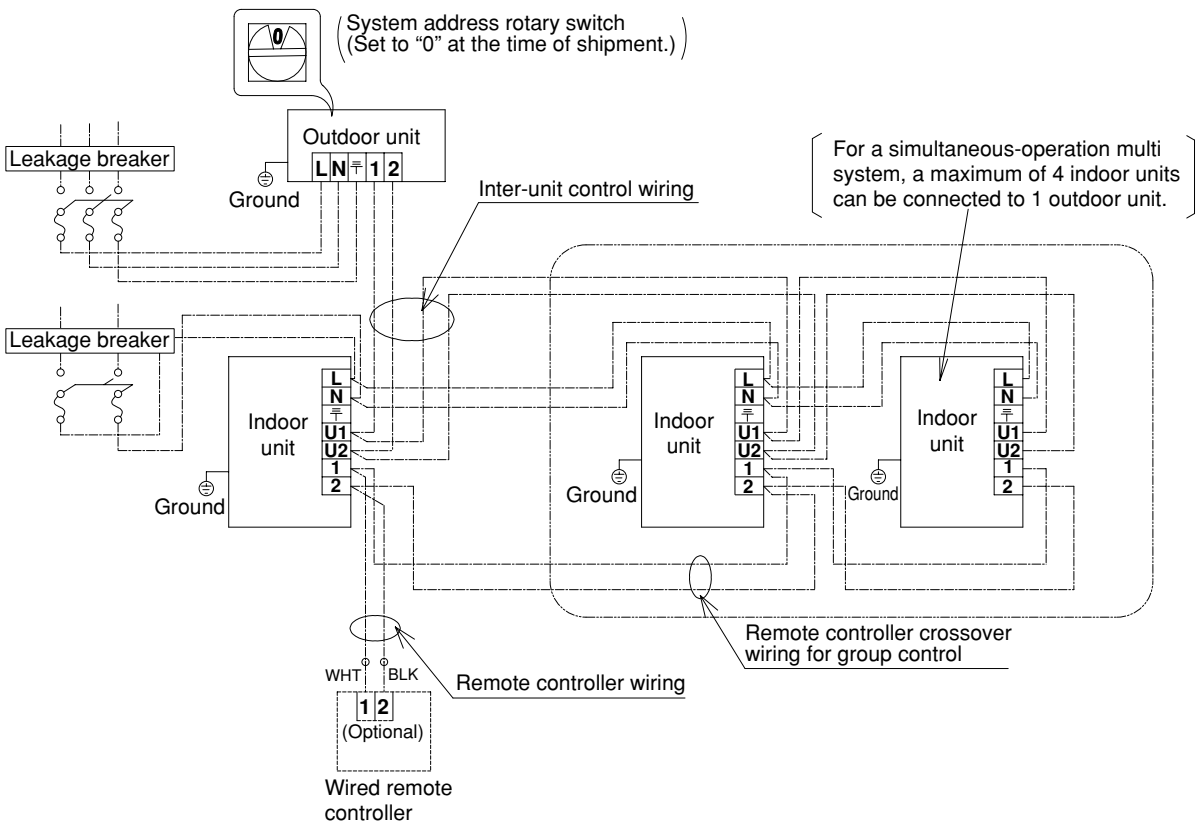


**Fig. 10-5**

### 10-8-2. Basic wiring diagram 2

Group control (when a central control device is not used)

- Simultaneous-operation multi system
  Up to 4 (Double-Twin) indoor units can be connected to 1 outdoor unit for operation.
  (However, coordinate the outdoor unit capacity and the total capacity of the indoor units.)
  (It is not possible to connect individual remote controllers for independent operation.)
  A maximum of 8 indoor units can be connected to 1 remote controller.
  When 2 or 3 indoor units are connected to each outdoor unit in the refrigerant system, set the system address (refrigerant tubing system address) before turning on the remote power switch. (Refer to 10-8-3. Setting the outdoor unit system addresses.)
  (Set using the system address rotary switch on the outdoor unit control PCB.)

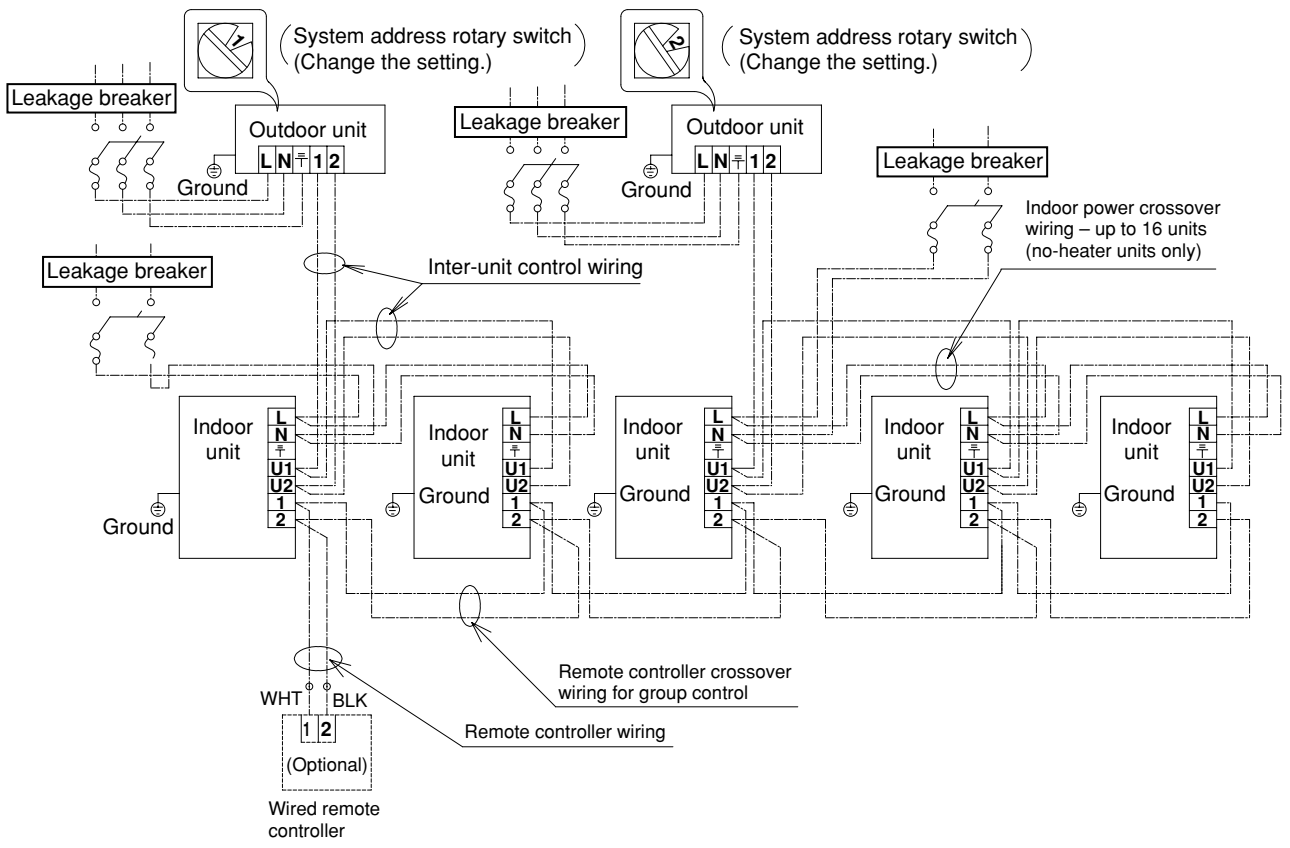


**Fig. 10-6**

**(Wiring procedure)**

(1) Connect the remote controller to the indoor unit remote controller wiring terminal plate (1, 2). (Remote controller wiring)

(2) Connect the indoor units (U1, U2) and the outdoor units (1, 2). Connect the other outdoor units and indoor units (with different refrigerant systems) in the same way. (Inter-unit control wiring)
Connect the remote controller crossover wiring to the indoor units (U1, U2) for each refrigerant system. (Inter-unit control wiring)

(3) Connect the remote controller crossover wiring (2 wires) from the remote controller wiring terminal plate (1, 2) on the indoor unit (unit where the remote controller is connected) to the remote controller terminal plates (1, 2) on the other indoor units. (Remote controller crossover wiring)

(4) Turn ON both the indoor and outdoor unit power and perform automatic address setting from the remote controller. (For the automatic address setting procedure, refer to 10-8-4.)

**NOTE**

* Models with auxiliary heaters cannot be used for crossover wiring of the indoor unit power wires. (Use a pull box to divide the wiring.)
Be sure to use the indoor unit temperature sensor (body sensor) when using this control. (Status at shipment.)

### 10-8-3. Setting the outdoor unit system addresses

For basic wiring diagram 2 (Set the system addresses: 1, 2, 3...)

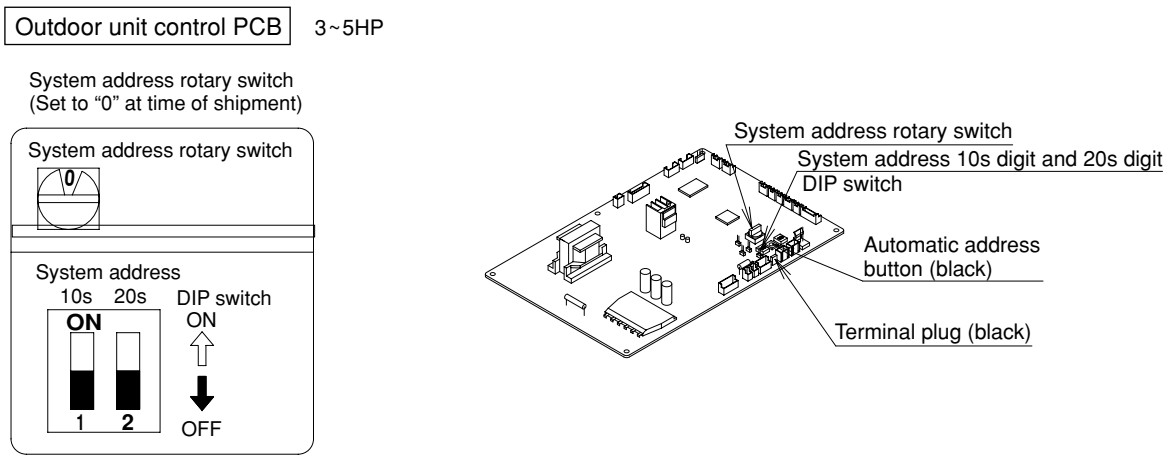


**Fig. 10-7**

| System address No. | System address 10s digit (2P DIP switch) | System address 1s place (Rotary switch) |
|---|---|---|
| 0 Automatic address (Setting at shipment = "0") | Both OFF | "0" setting |
| 1 (If outdoor unit is No. 1) | Both OFF | "1" setting |
| 2 (If outdoor unit is No. 2) | Both OFF | "2" setting |
| 11 (If outdoor unit is No. 11) | 10s digit ON | "1" setting |
| 21 (If outdoor unit is No. 21) | 20s digit ON | "1" setting |
| 30 (If outdoor unit is No. 30) | 10s digit and 20s digit ON | "0" setting |

### 10-8-4. Automatic address setting using the remote controller

When the outdoor unit shown in 10-8-2. Basic wiring diagram 2 is used for group control of multiple units , use the remote controller to perform automatic address setting. (During automatic address setting, "SETTING" blinks on the remote controller display.)

- Press the remote controller timer time ▲ button and ✎ button simultaneously. (Hold for 4 seconds or longer.) Then press the SET button. (Item code "AA" appears: All systems automatic address setting.)
  (Automatic address setting is performed in sequence for all outdoor units from No. 1 to No. 30. When automatic address setting is completed, the units return to normal stopped status.)
- To select each refrigerant system individually and perform automatic address setting, press the remote controller timer time ▲ button and ✎ button simultaneously. (Hold for 4 seconds or longer.) Then press either the temperature setting ▲ or ▼ button.
  (Item code "A1" appears: Individual system automatic address setting)
  Use either the UNIT or ↑ button to select the outdoor unit to perform automatic address setting for. (R.C.1 is displayed.) Then press the SET button. (Automatic address setting is performed for refrigerant system 1.)
  When automatic address setting for system 1 is completed, the system returns to normal stopped status.
  Again press the remote controller timer time ▲ button and the ✎ button simultaneously. Then in the same way as above (use the UNIT button to display "R.C.2"), select the next system and perform automatic address setting.

### 10-8-5. Indicating (marking) the indoor and outdoor unit combination number

Indicate (mark) the number after automatic address setting is completed.

(1) So that the combination of each indoor unit can be easily checked when multiple units are installed, ensure that the indoor and outdoor unit numbers correspond to the system address number on the outdoor unit control PCB, and use a magic marker or similar means which cannot be easily erased to indicate the numbers in an easily visible location on the indoor units (near the indoor unit nameplates).

Example: (Outdoor) 1 - (Indoor) 1, 2... (Outdoor) 2 - (Indoor) 1, 2...

(2) These numbers will be needed for maintenance. Be sure to indicate them.

* Use the remote controller to check the addresses of the indoor units. Press and hold the ⊘ button and ⊘ button for 4 seconds or longer (simple settings mode). Then press the UNIT button and select the indoor address. (Each time the button is pressed, the address changes as follows: 1-1, 1-2, ... 2-1, 2-2, ....) The indoor unit fan operates only at the selected indoor unit. Confirm that correct fan is operating, and indicate address on the indoor unit.

Press the ⊘ button again to return to the normal remote controller mode.
For details, refer to the separate handbook.

### 10-8-6. Main-sub remote controller control

Control using 2 remote controller switches

Main-sub remote controller control refers to the use of 2 remote controllers to control 1 or multiple indoor units. (A maximum of 2 remote controllers can be connected.)

● **Connecting 2 remote controllers to control 1 indoor unit**

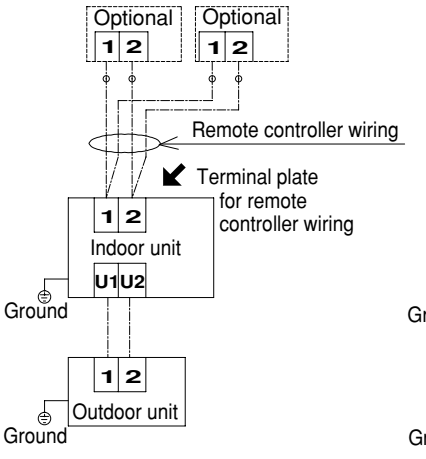


● **Connecting 2 remote controllers to control a simultaneous-operation multi system**

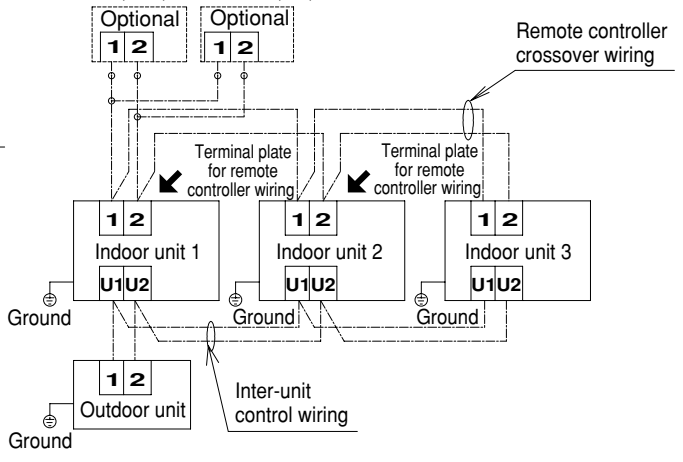


**(Setting procedure)**

(1) Set 1 of the 2 connected remote controllers as the main remote controller.

(2) On the other remote controller (sub remote controller), change the remote controller address connector on the reverse side of the remote controller switch PCB from the Main position to the Sub position.
The remote controller will now function as the sub remote controller.
The sub remote controller will also operate if connected to indoor unit 2.

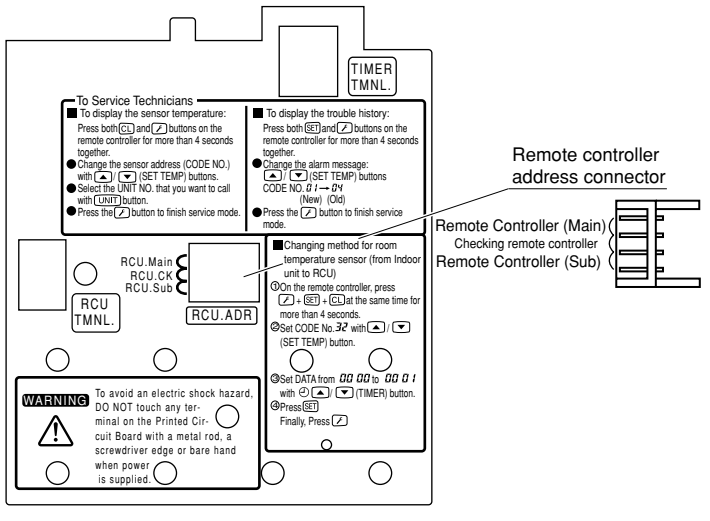


**Fig. 10-8**

■ **MAFP Type**

**10-9. Caution**

- **This unit may be used in a single-type refrigerant system where 1 outdoor unit is connected to 1 indoor unit, and also in a system where 1 outdoor unit is connected to multiple indoor units (maximum 4).**
  * If multiple indoor units are used, also refer to 10-16. System Control.
- **The indoor and outdoor unit control PCBs utilize a semiconductor memory element (EEPROM). The settings required for operation were made at the time of shipment.**
  **Only the correct combinations of indoor and outdoor units can be used.**

**10-10. Test Run Procedure**

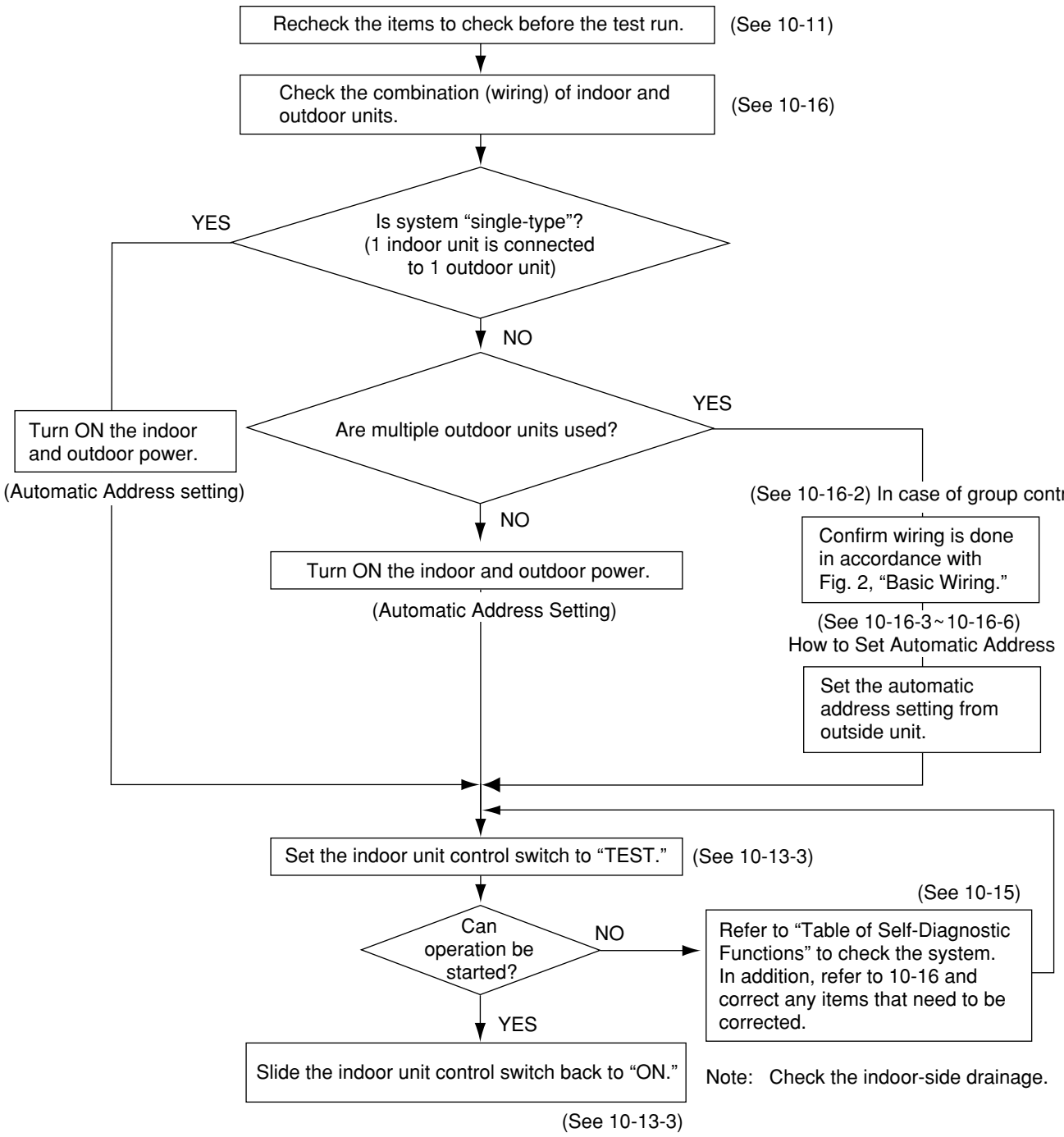


**Fig. 10-9**

### 10-11. Items to Check Before the Test Run

(1) Turn the remote power switch ON at least 12 hours in advance in order to energize the crank case heater.

(2) Fully open the closed valves on the narrow-tube and wide-tube sides.

(3) Set the slide switch inside the wireless remote controller cover to match the unit type. After changing the setting, press the ACL button.

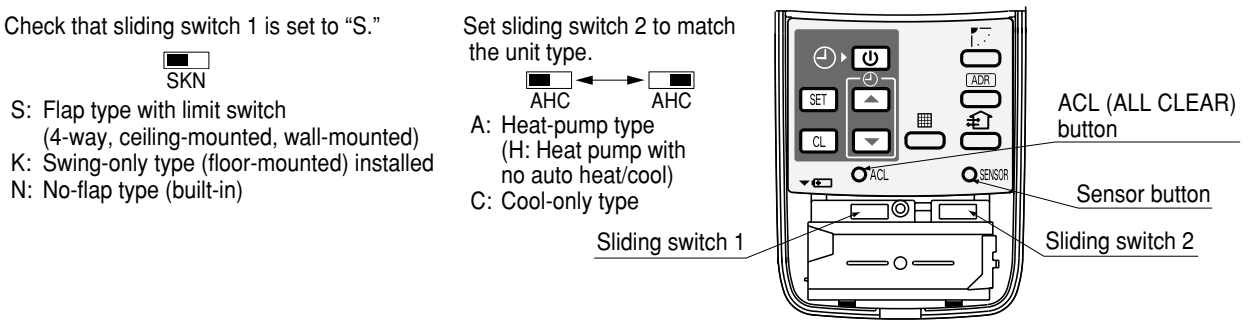


**Fig. 10-10**

### 10-12. Preparation for Test Run

#### 10-12-1. Switching the temperature sensor

- Temperature sensors are contained in the indoor unit and wireless remote controller. One or the other of the temperature sensors is used for operation.
- If (BODY SENSOR) appears on the LCD display of the wireless remote controller, then the indoor unit body sensor is used for operation.
  To switch to the remote controller sensor, open the remote controller cover and press the SENSOR button once. The (BODY SENSOR) display disappears and the remote control sensor is used for operation.

**NOTE**

- Even if the remote controller sensor is selected, the sensor will be automatically switched to the indoor unit body sensor if no temperature signal has been received from the remote controller for 10 minutes. Install the remote controller in a position where the signal can be reliably received by the unit.
- When group control is engaged, be sure to use the body sensor.

#### 10-12-2. Using the remote controller

- Face the remote controller toward the receiver (on the main unit).
- The signal can be received up to a distance of approximately 8 m. Use this distance as a guide. This distance may vary somewhat depending on the battery capacity and other factors.
- Be sure that there are no objects between the remote controller and the receiver which may block the signal.
- The unit beeps when a signal is received correctly. (For operation start only, the unit beeps twice.)
- Do not drop, throw, or wash the remote controller.
- Do not place the remote controller in locations exposed to direct sunlight or nearby a stove.

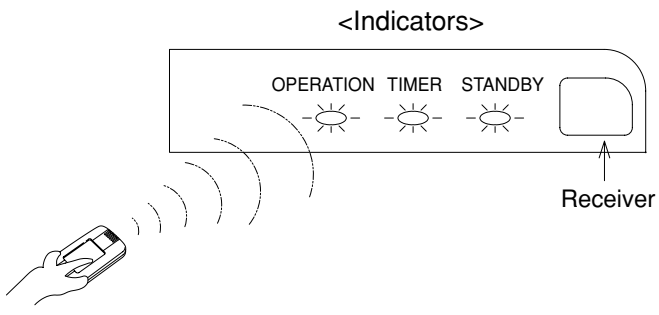


**Fig. 10-11**

### 10-13. Test Run

**Using the control unit**

Indoor control unit switch

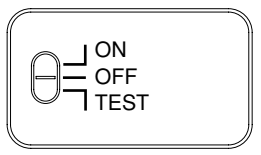


(1) Change the indoor control unit switch from "ON" → "TEST".
(The outdoor unit will not operate for 3 minutes after the power is turned ON and after operation is stopped.)

(2) All the indicator lamps blink while the test run is in progress.

(3) Temperature control is not possible during the test run.

(4) If correct operation is not possible, the trouble will be indicated by the indicator lamps. Refer to "Table of Self Diagnostic Functions and Corrections" and correct the problem.

Indicator lamps

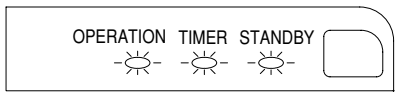


(5) After the test is completed, change the control unit switch from "TEST" → "ON". Confirm that the indicator lamps have stopped blinking. (A function is included which cancels the test run after a 60-minute timer has elapsed, in order to prevent continuous test run operation.)

**NOTE**

- This mode places a large load on the devices. Use it only for performing test runs.
- A test run is not possible if the power is turned ON with the switch in the TEST position. After the power has been turned ON, change the switch once to ON or OFF, then switch it back to the TEST position.

### 10-14. Precautions

- Request that the customer be present when the test run is performed. At this time, explain the operation manual and have the customer perform the actual steps.
- Be sure to pass the manuals and warranty certificate to the customer.
- Check that the AC 220 – 240 V wiring is not connected to the inter-unit control wiring connector terminal.

* If AC 220 – 240 V is accidentally applied, the indoor or outdoor unit control PCB fuse (0.5 A for both indoor and outdoor units) will blow in order to protect the PCB. Correct the wiring connections, then disconnect the 2P connectors (indoor: blue) (outdoor: blue, serial 1) that are connected to the PCB, and replace them with 2P connectors (indoor: brown) (outdoor: brown, serial 2).
(Refer to the figure below.) If operation is still not possible after changing the brown connectors, try cutting the varistor (black) (both indoor and outdoor).
(Be sure to turn the power OFF before performing this work.)

Indoor unit control PCB 2 HP

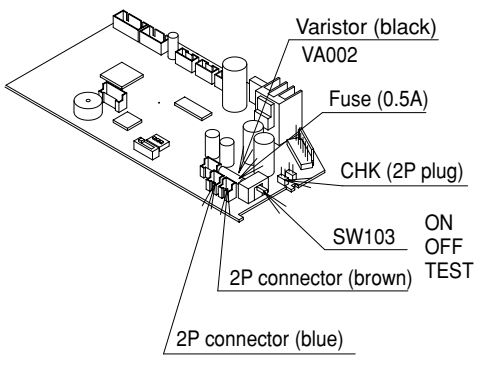


Outdoor unit control PCB 3 ~ 5 HP

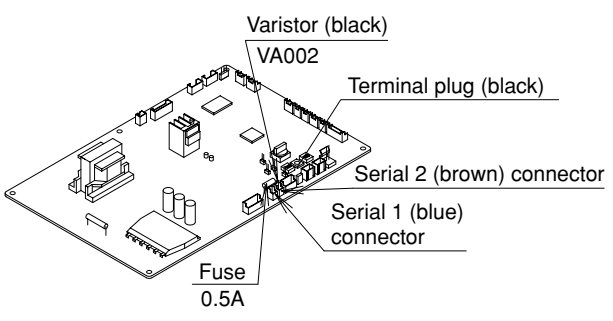


Indoor unit control PCB 3 HP

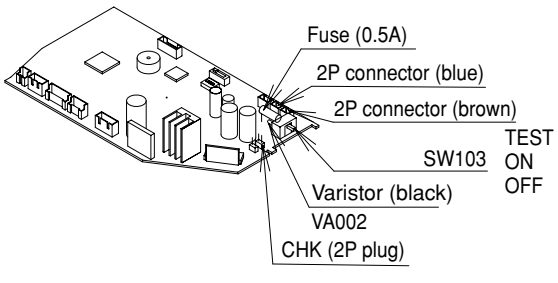


**Fig. 10-12**

## 10-15. Table of Self-Diagnostic Functions and Corrections

| Wired remote controller display (Field supply) | Indoor unit receiver lamp | Cause | | Correction |
|---|---|---|---|---|
| | | 1:1 connection (Single type) | Group connection (Simultaneous multi system) | |
| Nothing is displayed | Nothing is displayed | • Indoor operation switch is OFF.<br>• Indoor unit power is not ON. | • Same as in the left. | • Set the indoor operation switch ON.<br>• Turn ON the indoor unit power. |
| **E01** displayed | Operating lamp is blinking. | • Automatic address setting has not been completed.<br>• Inter-unit control wiring is cut or is not connected correctly. | • Same as in the left. | • Check the inter-unit control wiring.<br>• Perform automatic address setting (See 10-16). |
| **E14** displayed | | ——— | • Remote controller crossover wiring is cut or is not connected | • Check the remote controller crossover wiring.<br>• Perform automatic address setting again. |
| **E04** displayed | Standby lamp is blinking. | • Indoor-outdoor inter-unit wiring is not connected correctly. | • Same as in the left. | • Connect the wiring correctly. |
| **E06** displayed | | ——— | • Inter-unit control wiring is cut or is not connected | • Refer to 10-16 System Control, and make the correct settings. |
| **E15** displayed | | • Indoor unit capacity is too low. | • Same as in the left. | • Check that the total capacities of the indoor and outdoor units are appropriate. |
| **E16** displayed | | • Indoor unit capacity is too high. | | |
| **P05** displayed | Operation lamp and Standby lamp are blinking alternately. | • Reversed phase or open phase in the outdoor unit 3-phase power | • Same as in the left. | • Reverse 2 phases of the outdoor unit 3-phase power and connect them correctly. |
| **L02** displayed | Both the Operation lamp and Standby lamp are blinking together. | • Indoor-outdoor unit type mismatch. | • Same as in the left. | • Connect the units correctly. |
| **L13** displayed | | • Indoor-outdoor units are not setting correctly. | • Same as in the left. | • Connect the units correctly. |
| **L04** displayed | | ——— | • Outdoor unit address is duplicated | • Connect the units correctly. |
| **L07** displayed | | ——— | Remote controller crossover wiring is connected to the indoor unit, however, it is set for individual operation. | • Perform automatic address setting (See 10-16). |

## 10-16. System Control

System control refers to connecting link wiring for control, for simultaneous-operation multi systems, group control, and main-sub remote controller control.

### 10-16-1. Basic wiring diagram 1

Single type and simultaneous-operation multi system

- Simultaneous-operation multi system
  Up to 4 (Double-Twin) indoor units can be connected to 1 outdoor unit for operation.
  (However, coordinate the outdoor unit capacity and the total capacity of the indoor units.)
  (It is not possible to connect individual remote controllers for independent operation.)
- Be careful to avoid miswiring when connecting the wiring. (Miswiring will damage the units.)

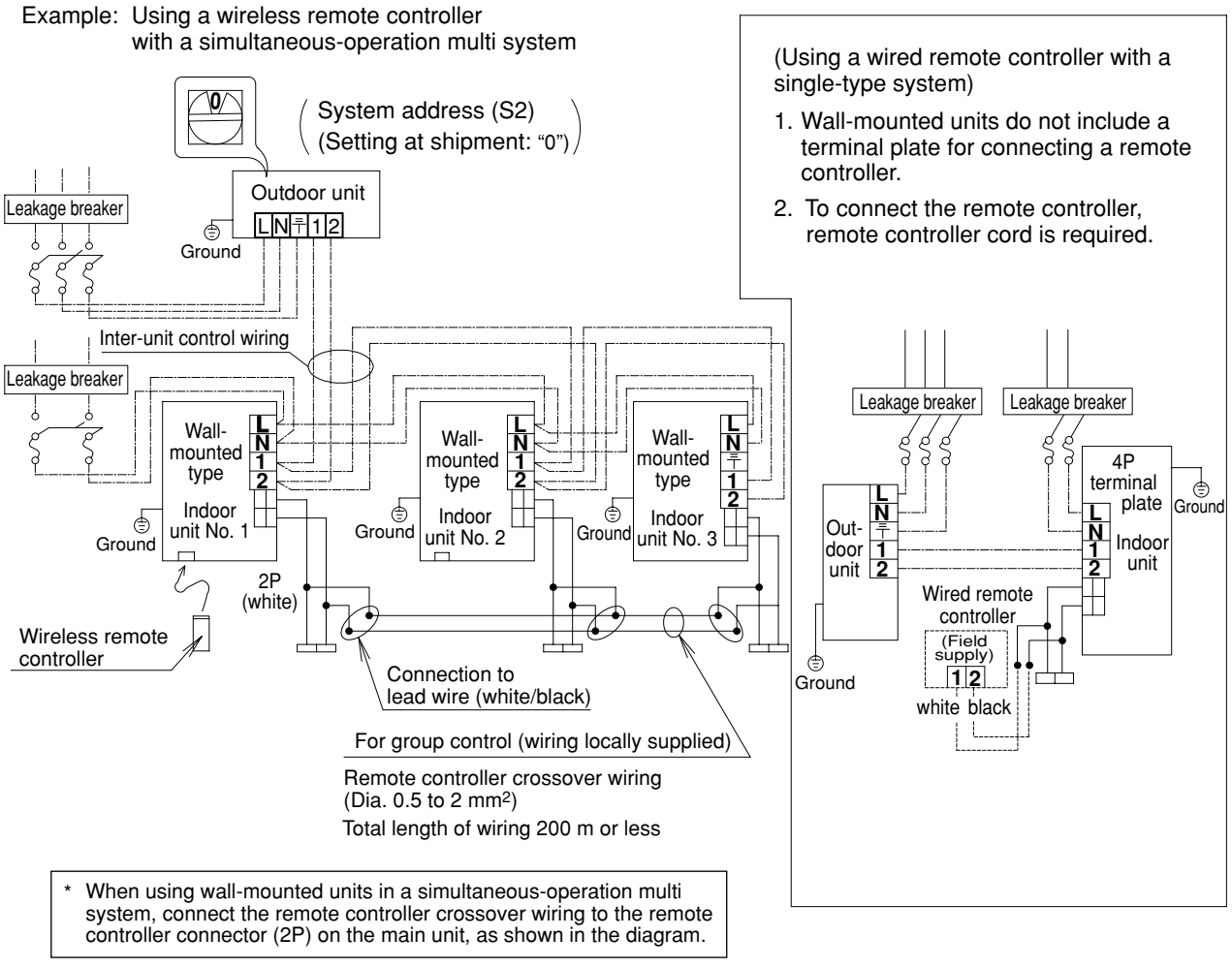


**Fig. 10-13**

**(Wiring procedure)**

(1) Set the No. 1 wall-mounted indoor unit so that it can be operated by the wireless remote controller. (This is set at the time of shipment.)
On the indoor unit control PCBs, set the No. 2 and following wall-mounted units to the sub remote controller. (Refer to 10-16-5.)

(2) Connect the crossover wiring to the lead wires (white/black) which extend out from the remote controller connectors of the No. 1 indoor unit and other wall-mounted indoor units (as shown in the basic wiring diagram 1 above). Connect the crossover wiring to 1 and 2 on the remote controller wiring terminal plate for units (4-way, ceiling-mounted, etc.) other than the No. 1 indoor unit.

(3) Connect the inter-unit control wiring to 1 and 2 on the No. 1 indoor unit terminal plate, and to 1 and 2 on the outdoor unit terminal plate.
Also connect the inter-unit control wiring between the indoor units.

(4) When the indoor and outdoor unit power is turned ON, automatic address setting is performed (when there is only 1 outdoor unit or when the system address is 0).

**NOTE**

* If the system address is “0,” automatic address setting is performed when the power is turned ON (in the case shown in basic wiring diagram 1).
  This requires approximately 4 – 5 minutes (when the outdoor / indoor unit ratio is 1:1 as shown in basic wiring diagram 1).
  During automatic address setting, LED 1 and 2 on the outdoor unit control PCB blink alternately. These LEDs turn OFF when automatic address setting is completed.

### 10-16-2. Basic wiring diagram 2

Group control (when a central control device is not used)

- A maximum of 8 indoor units can be connected to a single remote controller.
  Example: In a refrigerant system where 2 or 3 indoor units are connected to 1 outdoor unit, set the new system address (refrigerant system address) before turning ON the remote power switch. (Refer to 10-15-3.)
  (Set using the system address black rotary switch on the outdoor unit control PCB.)

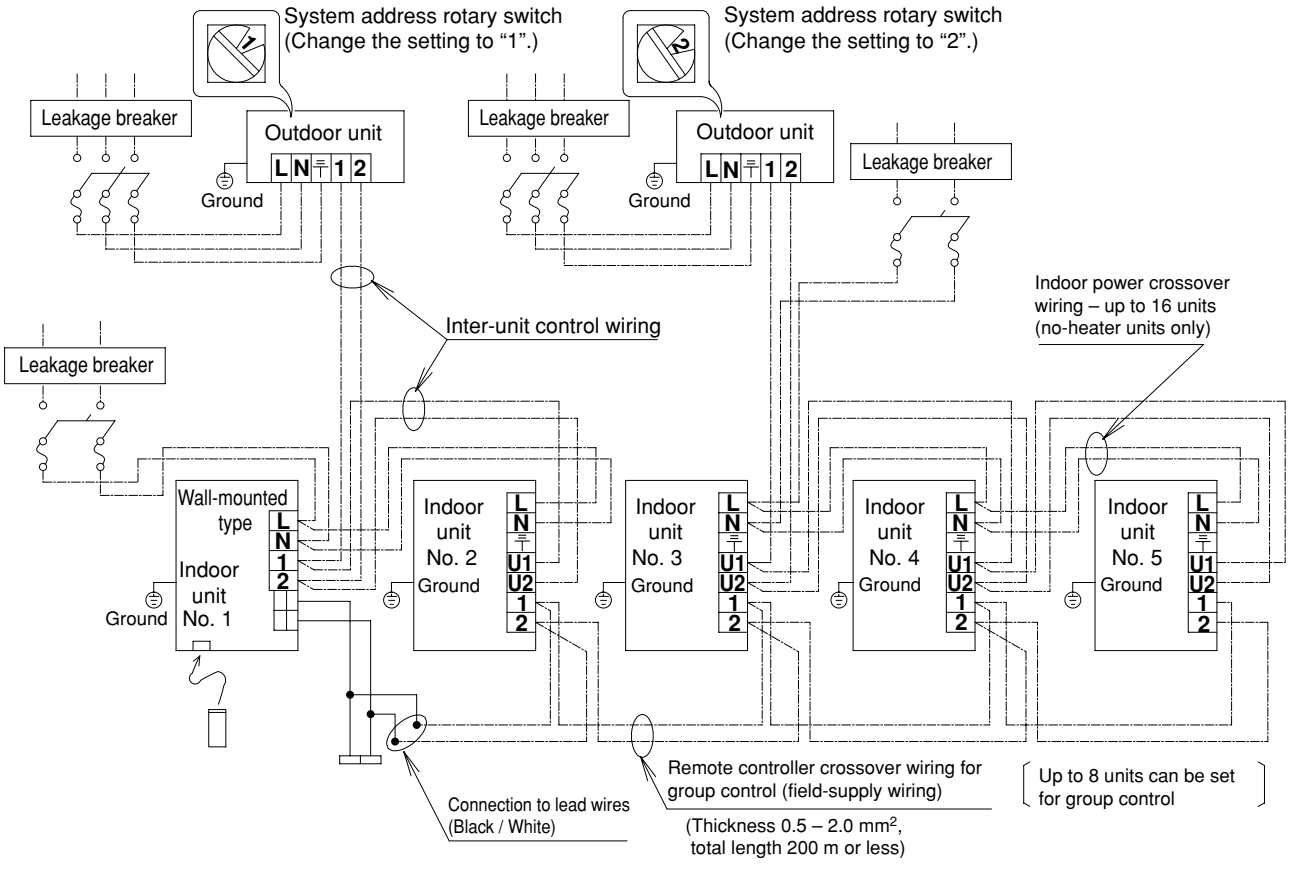


**Fig. 10-14**

1. Wall-mounted units do not include a terminal plate for connecting a remote controller.
2. For group control of wall-mounted units, connect the remote controller crossover wiring to the remote controller connector (2P) on the main unit, as shown in the diagram.

**(Wiring procedure)**

(1) Set the No. 1 wall-mounted indoor unit so that it can be operated by the wireless remote controller. (This is set at the time of shipment.)
  On the indoor unit control PCBs, set the No. 2 and following wall-mounted units to the sub remote controller. (Refer to Item 10-16-5.)

(2) Connect the crossover wiring to 1 and 2 on the remote controller wiring terminal plates of the No. 1 indoor unit and the other indoor units (as shown in the basic wiring diagram 2 above).

(3) Connect the inter-unit control wiring to 1 and 2 on the No. 1 indoor unit terminal plate, and to 1 and 2 on the outdoor unit terminal plate.
Connect the wiring in the same way from the other outdoor units to U1 and U2 on the indoor units terminal plates (different refrigerant system).

(4) Perform automatic address setting from the outdoor unit. (For the automatic address setting procedure, refer to 10-16-4.)

**NOTE**

* Models with auxiliary heaters cannot be used for “crossover wiring” of the indoor unit power wires. (Use a pull box to divide the wiring.)
* Be sure to use the indoor unit temperature sensor (body sensor) when using this control. (Status at shipment)

### 10-16-3. Setting the outdoor unit system addresses

For basic wiring diagram 2 (Set the system addresses: 1, 2,...)

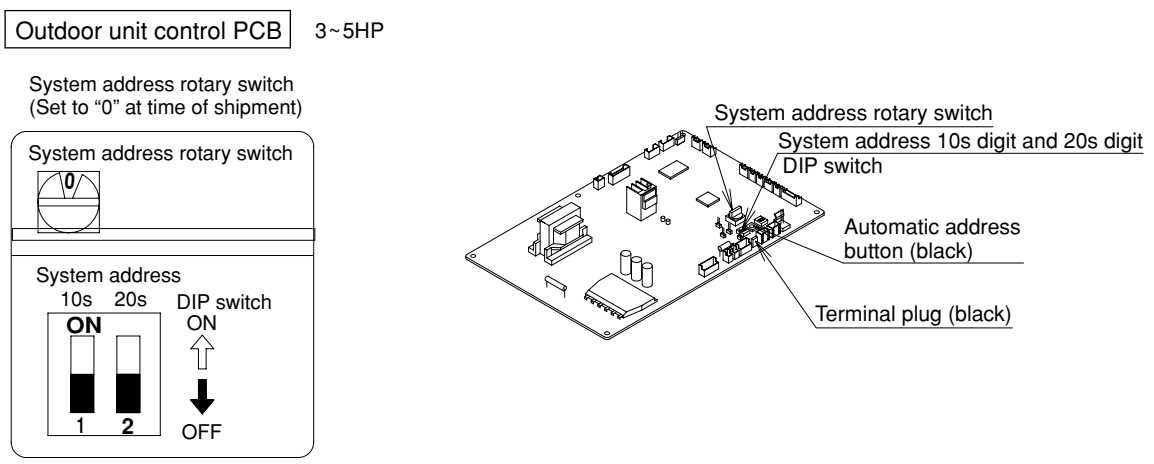


**Fig. 10-15**

| System address No. | System address 10s digit (2P DIP switch) | System address 1s place (Rotary switch) |
|---|---|---|
| 0 Automatic address (Setting at shipment = “0”) | Both OFF | “0” setting |
| 1 (If outdoor unit is No. 1) | Both OFF | “1” setting |
| 2 (If outdoor unit is No. 2) | Both OFF | “2” setting |
| 11 (If outdoor unit is No. 11) | 10s digit ON | “1” setting |
| 21 (If outdoor unit is No. 21) | 20s digit ON | “1” setting |
| 30 (If outdoor unit is No. 30) | 10s digit and 20s digit ON | “0” setting |

### 10-16-4. Automatic address setting from the outdoor unit

When there are multiple outdoor units as shown in basic wiring diagram 2

- If the power can be turned ON separately for the indoor and outdoor units in each system (indoor unit addresses can be set without operating the compressor):

(1) Turn ON the indoor and outdoor unit power for refrigerant system 1.
Press and hold the automatic address setting button (black) for 1 second or longer at the outdoor unit where the power was turned ON.
↓
Communication for automatic address setting begins. LED 1 and 2 on the outdoor unit control PCB blink alternately, and turn OFF when address setting is completed.
↓ <Approximately 4 – 5 minutes are required.>

(2) Next, turn ON the power only at the indoor and outdoor units in a different system. Press the automatic address setting button (black) on the outdoor unit.
↓
LED 1 and 2 on the outdoor unit control PCB blink alternately, and turn OFF when address setting is completed.
Repeat the same procedure for each system and complete automatic address setting.
↓

(3) Operation using the remote controller is now possible.

### 10-16-5. Indoor unit remote controller main-sub setting

- When multiple wall-mounted indoor units are installed for group control in a simultaneous-operation multi system, set the control PCB at the No. 2 and following wall-mounted units to “Sub remote control.”
  If a wired remote controller is used, set the wired remote controller to “Sub.”
  If 2 wireless remote controllers are used, set the wireless PCB (DIP switch) on the second remote controller to “Sub.”

### 10-16-6. Indoor unit address setting

- If multiple single-type units are installed in the same room, the addresses can be set to prevent signal interference.
  By coordinating the numbers of the indoor unit (wireless PCB) and remote controller addresses, up to 6 indoor units can be controlled independently by their respective remote controllers.
  Independent control is not possible when a simultaneous-operation multi system is used.

- Checking the addresses
  Press the remote controller address button to display the current address on the remote controller display.
  If this address matches the indoor unit (wireless PCB) address, the buzzer will sound.
  (If ALL is set, the buzzer will always sound.)
  If ALL is set, operation is possible regardless of the indoor unit address.
  Point the remote controller toward the receiver (indoor unit) that you wish to operate, and send the operation signal.

- Remote controller address setting
  Press and hold the address button for 4 seconds or longer to display the address on the remote controller display. The current address appears blinking.
  The address changes each time the remote controller address button is pressed: ALL → 1 → 2 → 3 → ... → 6.
  Set the address to match the remote controller you wish to operate.
  When the SET button is pressed, the address stops blinking and is displayed for 5 seconds. The buzzer sounds if the address matches the indoor unit.

| Remote controller address display | Address ALL | Address 1 | Address 2 | Address 6 |
|---|---|---|---|---|
| Indoor unit PCB address, DIP switch | 6 5 4 ON / 3 2 1 OFF, Address, 1 2 3, NO | 6 5 4 ON / 3 2 1 OFF, Address, 1 2 3, NO | 6 5 4 ON / 3 2 1 OFF, Address, 1 2 3, NO | 6 5 4 ON / 3 2 1 OFF, Address, 1 2 3, NO |

For address switches 1, 2, and 3, turn DIP switch 1 to OFF.
For address switches 4, 5, and 6, turn DIP switch 1 to ON.

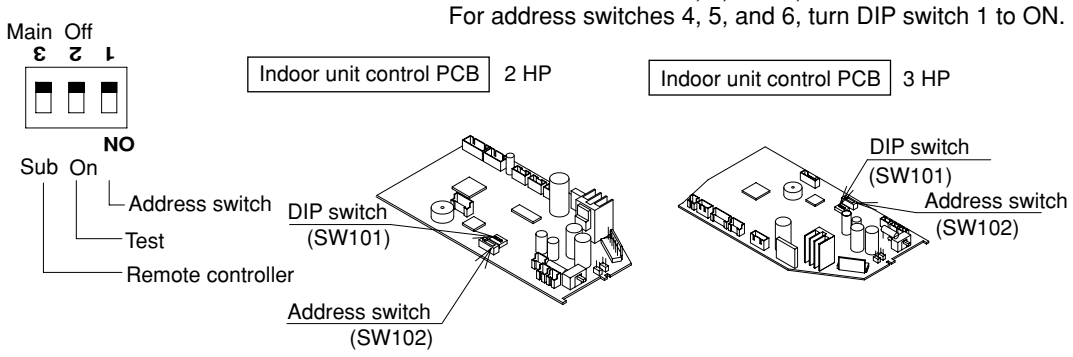


**Fig. 10-16**

## ■ CAFP, SPAFP, DSAFP Type (for Link Wiring)

### 10-17. Caution

**This unit may be used in a single-type refrigerant system where 1 outdoor unit is connected to 1 indoor unit, and also in a system where 1 outdoor unit is connected to multiple indoor units (maximum 4 < Double-Twin >).**

- This test run manual describes primarily the procedure when using the wired remote controller.
- If link wiring is used, set the outdoor unit system address to allow the combination of indoor and outdoor units to be identified. At the same time, indicate the indoor-outdoor unit combination number in a location where it can be checked easily (near the indoor unit nameplates). (This number will be required for subsequent maintenance. Refer to 10-22-2, 3, 4.)
- Request that the customer be present when the test run is performed. At this time, explain the operation manual and have the customer perform the actual steps.
- Be sure to pass the manuals and warranty certificate to the customer.
- Check that the AC 220 – 240 V wiring is not connected to the inter-unit control wiring connector terminal.
  If AC 220 – 240 V is accidentally applied, the indoor or outdoor unit control PCB fuse (0.5 A for both indoor and outdoor units) will blow in order to protect the PCB. Correct the wiring connections, then disconnect the 2P connectors (indoor: blue, OC) (outdoor: blue, serial 1) that are connected to the PCB, and replace them with 2P connectors (indoor: brown, EMG) (outdoor: brown, serial 2). (Refer to the figure below.)
  If operation is still not possible after changing the brown connectors, try cutting the varistor (black) (both indoor and outdoor).
  (Be sure to turn the power OFF before performing this work.)

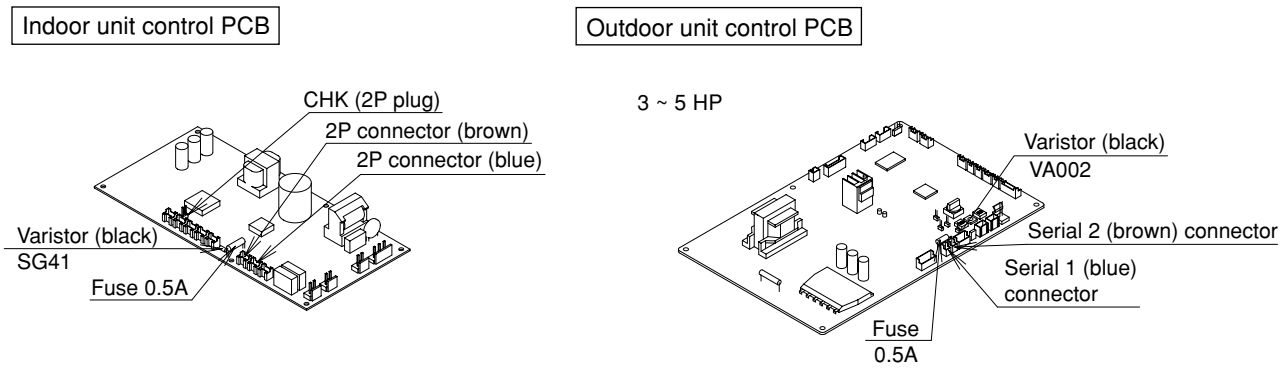


**Fig. 10-17**

### 10-18. Test Run Procedure

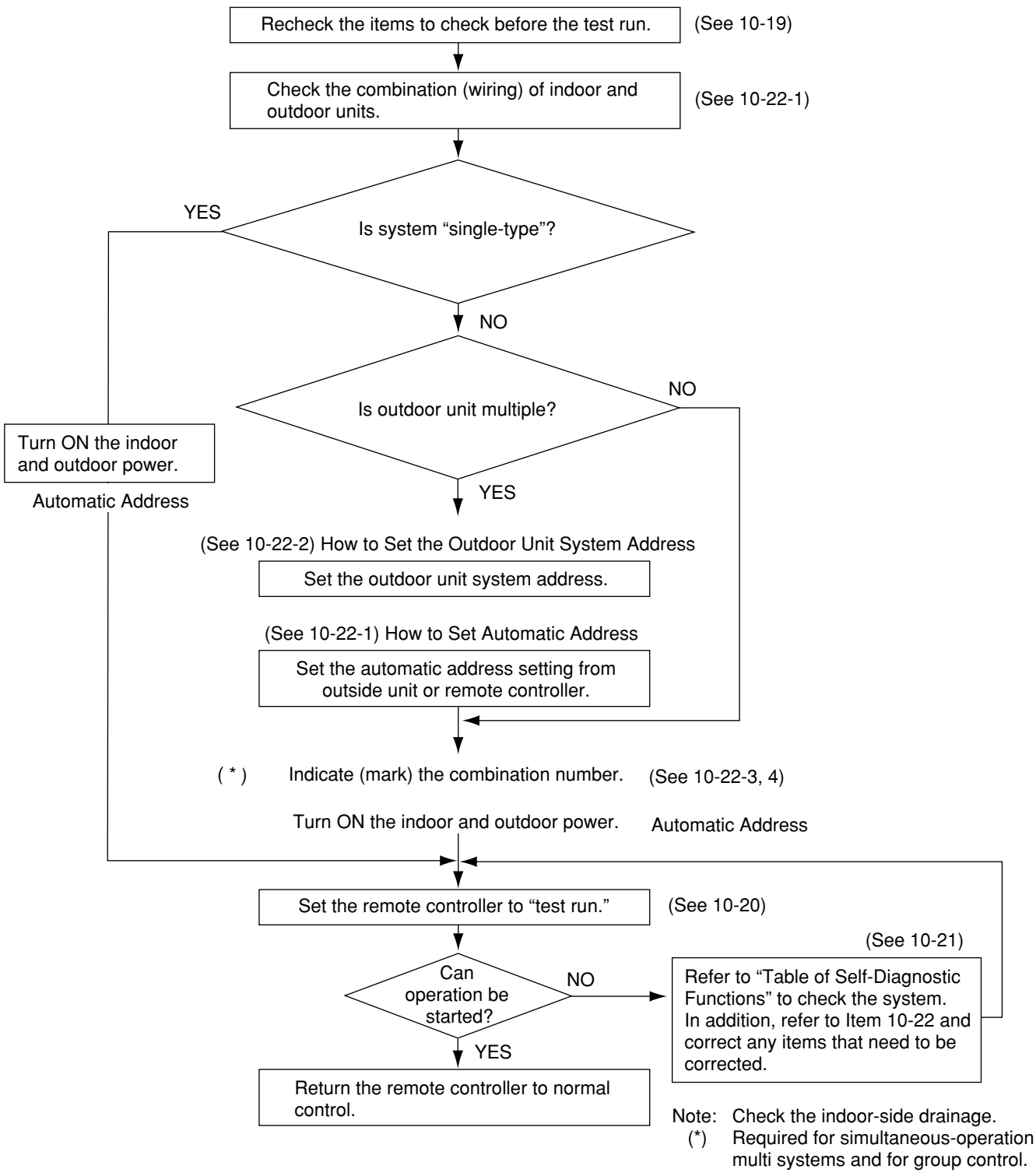


**Fig. 10-18**

### 10-19. Items to Check Before the Test Run

(1) Turn the remote power switch ON at least 12 hours in advance in order to energize the crank case heater.

(2) Fully open the closed valves on the narrow-tube and wide-tube sides.

### 10-20. Test Run Using the Remote Controller

(1) Press and hold the remote controller button for 4 seconds or longer. Then press the button.

- "TEST" appears in the LCD display during the test run.
- Temperature control is not possible when test run mode is engaged.
  (This mode places a large load on the devices. Use it only when performing the test run.)

(2) Use either Heating or Cooling mode to perform the test run.
Note: The outdoor unit will not operate for approximately 3 minutes after the power is turned ON or after it stops operating.

(3) If normal operation is not possible, a code appears on the remote controller LCD display.
Refer to the "Table of Self-Diagnostic Functions and Corrections" on the next page, and correct the problem.

(4) After the test run is completed, press the button again. Check that "TEST" disappears from the LCD display.
(This remote controller includes a function that cancels test run mode after a 60-minute timer has elapsed, in order to prevent continuous test run operation.)

(5) For the test run of an inverter outdoor unit, operate the compressors for a minimum of 10 minutes (in order to check for open phase).

* When performing a test run using a wired remote controller, operation is possible without attaching the cassette-type ceiling panel.
("P09" will not be displayed.)

## 10-21. Table of Self-Diagnostic Functions and Corrections CAFP, SPAFP, DSAFP, MAFP Type

| Wired remote controller display | Indoor unit receiver lamp | Cause | Correction |
|---|---|---|---|
| | | Group connection and simultaneous-operation multi system | |
| Nothing is displayed | Nothing is displayed | • Remote controller is not connected with indoor unit correctly.<br>• Indoor unit power is not ON. | Connect the remote controller correctly. Turn ON the indoor unit power. |
| **E01** displayed | Operation lamp is blinking. | • Automatic address setting has not been completed.<br>• Inter-unit control wiring is cut or is not connected correctly.<br>• Remote controller is not connected with indoor unit correctly. | Check the remote controller and inter-unit control wiring.<br>Perform automatic address setting (10-22). |
| **E02** displayed | | • Remote controller is not connected with indoor unit correctly. | Connect the remote controller correctly. |
| **E14** displayed | | • Remote controller crossover wiring is cut or is not connected correctly. | Check the remote controller crossover wiring.<br>Perform automatic address setting again. |
| **E04** displayed | Standby lamp is blinking. | • Indoor-outdoor inter-unit wiring is not connected correctly. | Connect the wiring correctly. |
| **E06** displayed | | • Inter-unit control wiring is cut or is not connected correctly. | Refer to 10-22-1. Basic wiring diagram, and make the correct setting. |
| **E15** displayed | | • Indoor unit capacity is too low. | Check that the total capacities of the indoor and outdoor units are appropriate. |
| **E16** displayed | | • Indoor unit capacity is too high. | |
| **P05** displayed | Timer lamp and Standby lamp are blinking alternately. | • Reversed phase or open phase in the 3-phase power at one of the outdoor units in the group.<br>• Insufficient gas | Reverse 2 phases of the outdoor unit 3-phase power and connect them correctly. |
| **P09** displayed | Timer lamp and Standby lamp are blinking alternately. | • Ceiling panel connector at one of the indoor units in the group is not connected correctly. | Connect the indoor unit ceiling panel connector correctly. |
| **P12** displayed | | • DC fan trouble at one of the indoor units in the group. | Check whether the fan holder is loose.<br>Check the wiring between the DC fan and the PCB. |
| **L02**<br>**L13** displayed | Both the Operation lamp and Standby lamp are blinking together. | • Indoor-outdoor unit type mismatch. | Check that the indoor and outdoor unit types are correct. |
| **L07** displayed | | • Remote controller crossover wiring is connected to the indoor unit, however it is set for individual operation. | Perform automatic address setting (10-22). |
| **L10** displayed | | • Check outdoor operation with separate maintanance-use remote controller. | |

## 10-22. Automatic Address Setting

### 10-22-1. Basic wiring diagram

● **Link wiring**

**NOTE**

- A terminal plug (black) is attached to each of the outdoor unit control PCBs. At only one outdoor unit, leave the terminal plug short-circuit socket on the "Yes" side. At all the other outdoor units, change the socket (from "Yes" to "No").
- A maximum of 8 indoor units can be connected to 1 remote controller for group control.

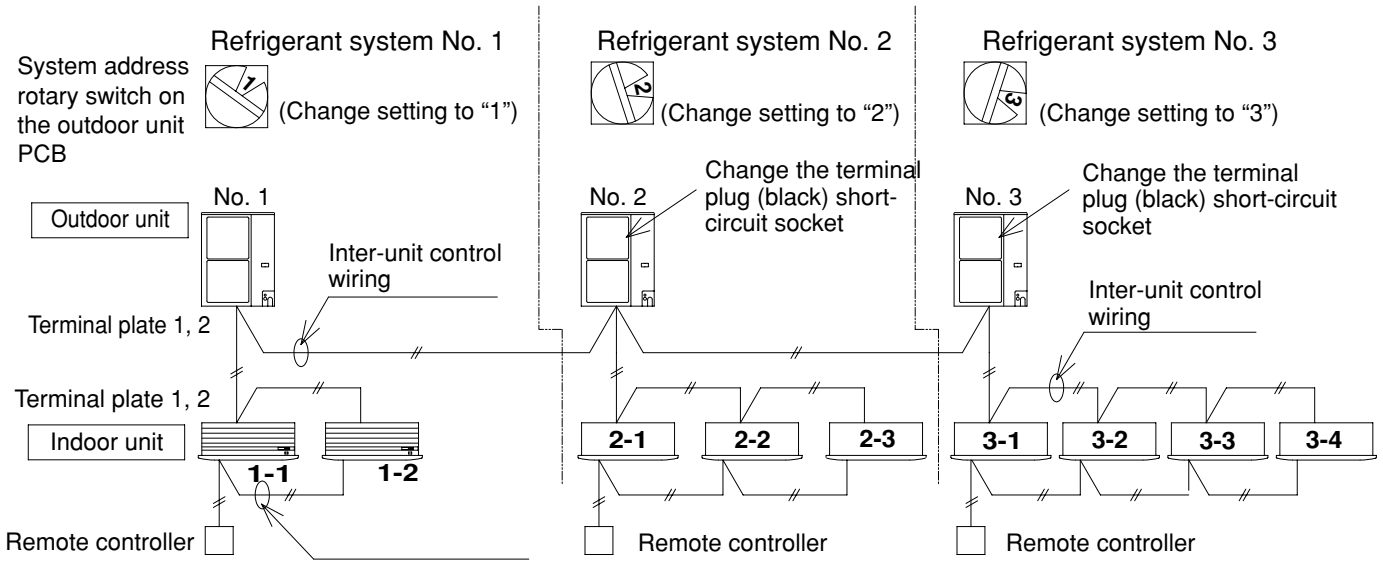


**Fig. 10-19**

**Automatic address setting from the outdoor unit CAFP, SPAFP, DSAFP type**

**Case 1**

- If the power can be turned ON separately for the indoor and outdoor units in each system, the indoor unit addresses can be set without running the compressor.

(1) Turn on the indoor and outdoor unit power for refrigerant system 1.
Press and hold the automatic address setting button (black) for 1 second or longer at the outdoor unit where the power was turned ON.
↓
Communication for automatic address setting begins.
↓
LED 1 and 2 on the outdoor unit control PCB blink alternately, and turn OFF when address setting is completed.
↓ <Approximately 4 – 5 minutes are required.>

(2) Next, turn ON the power only at the indoor and outdoor units in a different system. Press the automatic address setting button (black) on the outdoor unit.
↓
LED 1 and 2 on the outdoor unit control PCB blink alternately, and turn OFF when address setting is completed.
↓
Repeat the same procedure for each system and complete automatic address setting.
↓

(3) Operation using the remote controller is now possible.

**Case 2**

- If the power cannot be turned ON separately for the indoor and outdoor units in each system:
  The compressors must be run in order to automatically set the indoor unit addresses. Therefore perform this step after completing the refrigerant tubing work.

(1) Turn ON the power to the indoor and outdoor units in all refrigerant systems.

↓

When setting addresses in cooling mode

(2) Short-circuit the mode-change pin at the outdoor unit where automatic address setting will be performed. Then press the automatic address setting button (black).

↓

When setting addresses in heating mode

(2) Press the automatic address setting button (black) at the outdoor unit where automatic address setting will be performed.

↓

(3) LED 1 and 2 blink alternately. The compressors begin running in Cooling (or Heating) mode. Communication for automatic address setting begins, using the temperature changes at the indoor units.

<All indoor units are in operating status.>

↓

Address setting is completed when the compressors stop and the LED indicators turn OFF. <Approximately 15 minutes is required for 1 system.>
If address setting fails, LED 1 and 2 blink simultaneously and the alarm contents are displayed at the remote controller.

(4) After 1 system is completed, be sure to press the automatic address setting button (black) at the other outdoor units to complete automatic address setting in the same way for each system.

(5) Operation using the remote controller is now possible.

**Automatic address setting using the remote controller**

**Case 3**

- If the power can be turned ON separately for the indoor and outdoor units in each system (indoor unit addresses can be set without running the compressor):

Individual system automatic address setting: Display item code “A1.”

(1) Press the remote controller timer time ▲ button and ↗ button simultaneously. (Hold for 4 seconds or longer.)

↓

(2) Then press either the temperature setting ▲ or ▼ button.
(Confirm that the item code is “A1.”)

↓

(3) Use either the UNIT or ↑ button to select the outdoor unit to perform automatic address setting for. Then press the SET button.
(“R.C.1” is displayed, and automatic address setting is performed for refrigerant system 1.)
When automatic address setting for system 1 is completed, the units return to normal stopped status.
<Approximately 4 – 5 minutes are required.>

During automatic address setting, “SETTING” blinks on the remote controller display. This display disappears when address setting is completed.

**Case 4**

- If the power cannot be turned ON separately for the indoor and outdoor units in each system:
  (The compressors must be run in order to automatically set the indoor unit addresses. Therefore perform this step after completing the refrigerant tubing work.)

<u>All-systems automatic address setting: Display item code “AA.”</u>

(1) Press the remote controller timer time ⏲ button and ✎ button simultaneously. (Hold for 4 seconds or longer.)

↓

(2) Next press the SET button.
(Automatic address setting is performed in sequence for all outdoor units from No. 1 to No. 30. When automatic address setting is completed, the units return to normal stopped status.)
<Approximately 15 minutes is required for each system.>

↓

During automatic address setting, “SETTING” blinks on the remote controller display. This display disappears when address setting is completed.

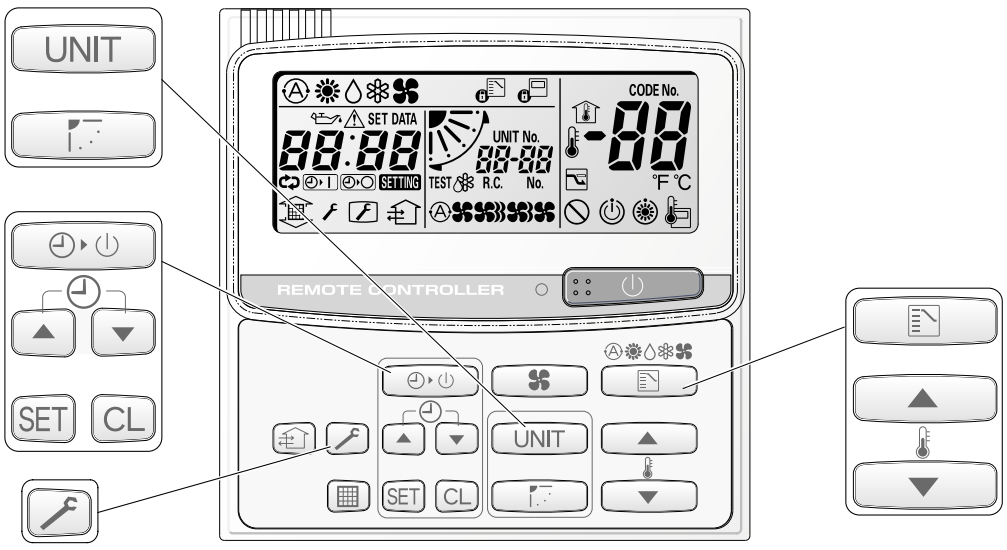


**Fig. 10-20**

### 10-22-2. Setting outdoor unit system addresses

For the basic wiring diagram (Set the system addresses: 1, 2, 3...)

Outdoor unit control PCB 3 ~ 5 HP

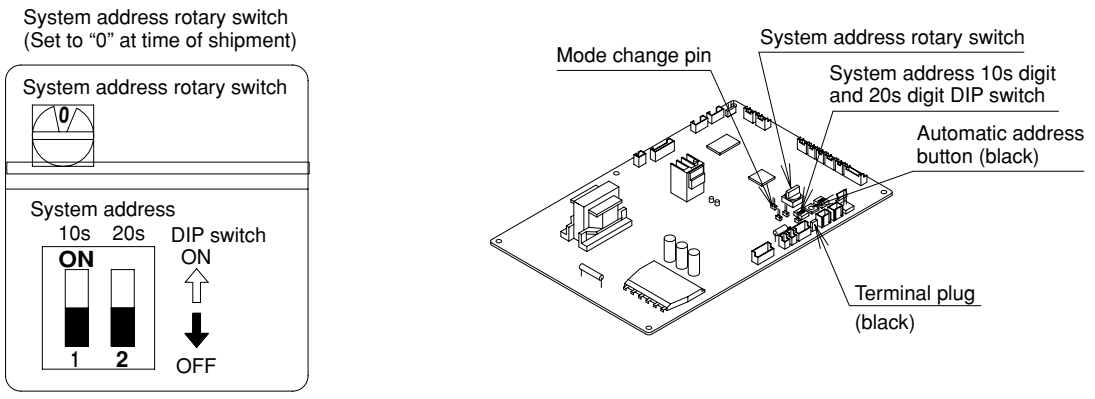


**Fig. 10-21**

| System address No. | System address 10s digit (2P DIP switch) | System address 1s place (Rotary switch) |
|---|---|---|
| 0 Automatic address (Setting at shipment = "0") | Both OFF | "0" setting |
| 1 (If outdoor unit is No. 1) | Both OFF | "1" setting |
| 2 (If outdoor unit is No. 2) | Both OFF | "2" setting |
| 11 (If outdoor unit is No. 11) | 10s digit ON | "1" setting |
| 21 (If outdoor unit is No. 21) | 20s digit ON | "1" setting |
| 30 (If outdoor unit is No. 30) | 10s digit and 20s digit ON | "0" setting |

### 10-22-3. Checking indoor unit addresses

Use the remote controller to check the addresses of the indoor units. Press and hold the ⊘ button and ⊘ button for 4 seconds or longer (simple settings mode, “ALL” appears on the remote controller). Then press the UNIT button and select the indoor address.
(For the system addresses of the No. 1 outdoor unit, each time the button is pressed, the address changes as follows: 1-1, 1-2, ... 1-1, ...)
The indoor unit fan operates only at the selected indoor unit. Confirm the indoor unit address. (For the system addresses of the No. 2 outdoor unit, the displayed addresses are 2-1, 2-2, ...)

Press the ⊘ button again to return to the normal remote controller mode.

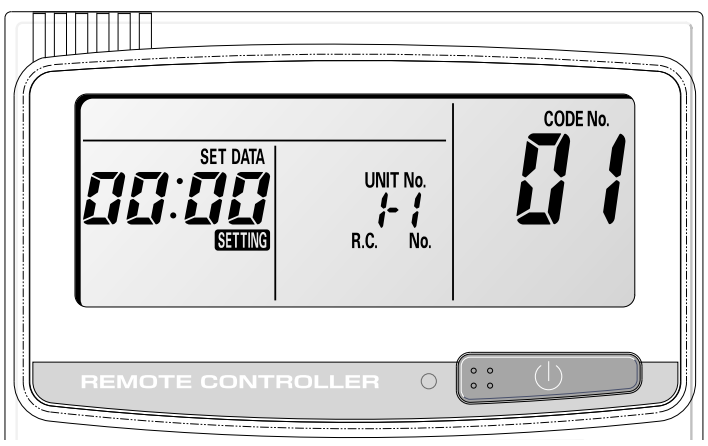


**Fig. 10-22**

### 10-22-4. Indicating (marking) the indoor and outdoor unit combination number

Indicate (mark) the number after automatic address setting is completed.

(1) So that the combination of each indoor unit can be easily checked when multiple units are installed, ensure that the indoor and outdoor unit numbers correspond to the system address number on the outdoor unit control PCB, and use a magic marker or similar means which cannot be easily removed to indicate the numbers in an easily visible location on the indoor units (near the indoor unit nameplates).

Example: (Outdoor) 1 – (Indoor) 1, 2... (Outdoor) 2 – (Indoor) 1, 2...

(2) These numbers will be needed for maintenance. Be sure to indicate them.

## ■ MAFP Type (for Link Wiring)

### 10-23. Caution

- **This unit may be used in a single-type refrigerant system where 1 outdoor unit is connected to 1 indoor unit, and also in a system where 1 outdoor unit is connected to multiple indoor units (maximum 4).**
- If link wiring is used, set the outdoor unit system address to allow the combination of indoor and outdoor units to be identified. At the same time, indicate the indoor-outdoor unit combination number in a location where it can be checked easily (near the indoor unit nameplates). (This number will be required for subsequent maintenance. Refer to 10-26-3, 4.)
- Request that the customer be present when the test run is performed. At this time, explain the operation manual and have the customer perform the actual steps.
- Be sure to pass the manuals and warranty certificate to the customer.
- Check that the AC 220 – 240 V wiring is not connected to the inter-unit control wiring connector terminal.
  If AC 220 – 240 V is accidentally applied, the indoor or outdoor unit control PCB fuse (0.5 A for both indoor and outdoor units) will blow in order to protect the PCB. Correct the wiring connections, then disconnect the 2P connectors (indoor: blue, OC) (outdoor: blue, serial 1) that are connected to the PCB, and replace them with 2P connectors (indoor: brown, EMG) (outdoor: brown, serial 2). (Refer to the figure below.)
  If operation is still not possible after changing the brown connectors, try cutting the varistor (black) (both indoor and outdoor).
  (Be sure to turn the power OFF before performing this work.)

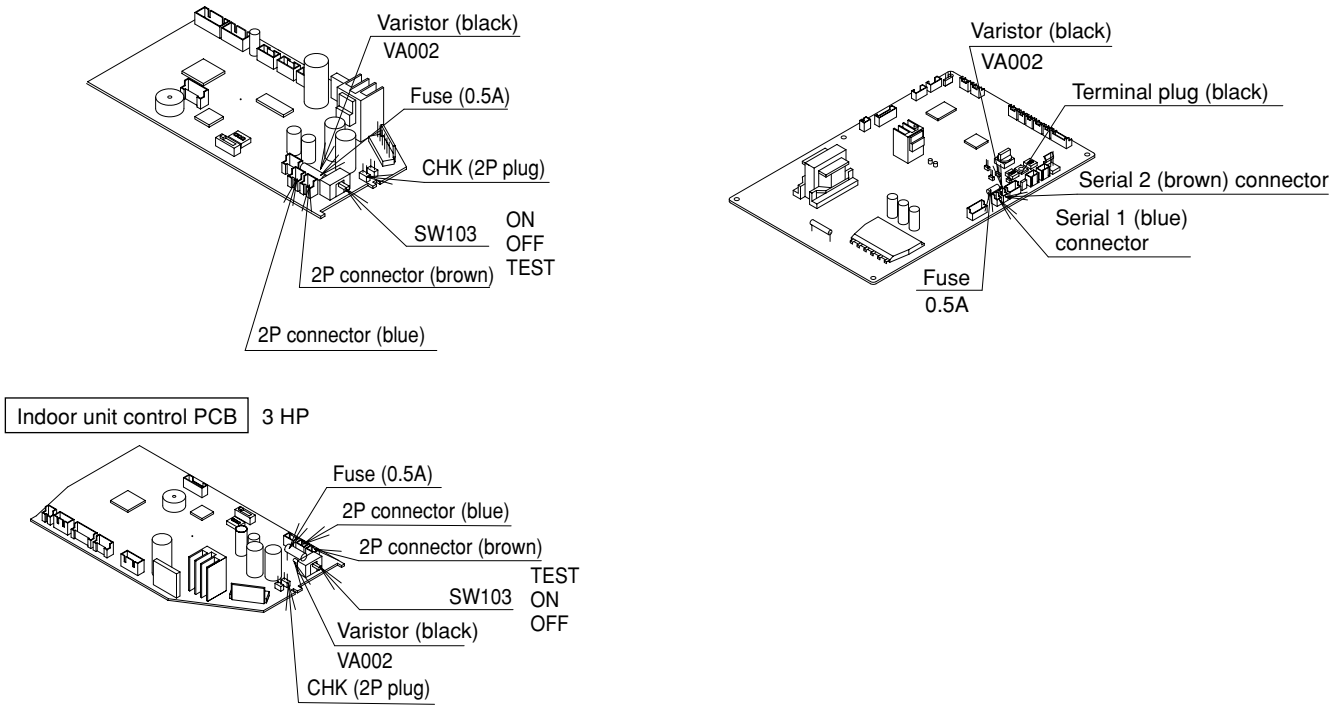


**Fig. 10-23**

## 10-24. Test Run Procedure

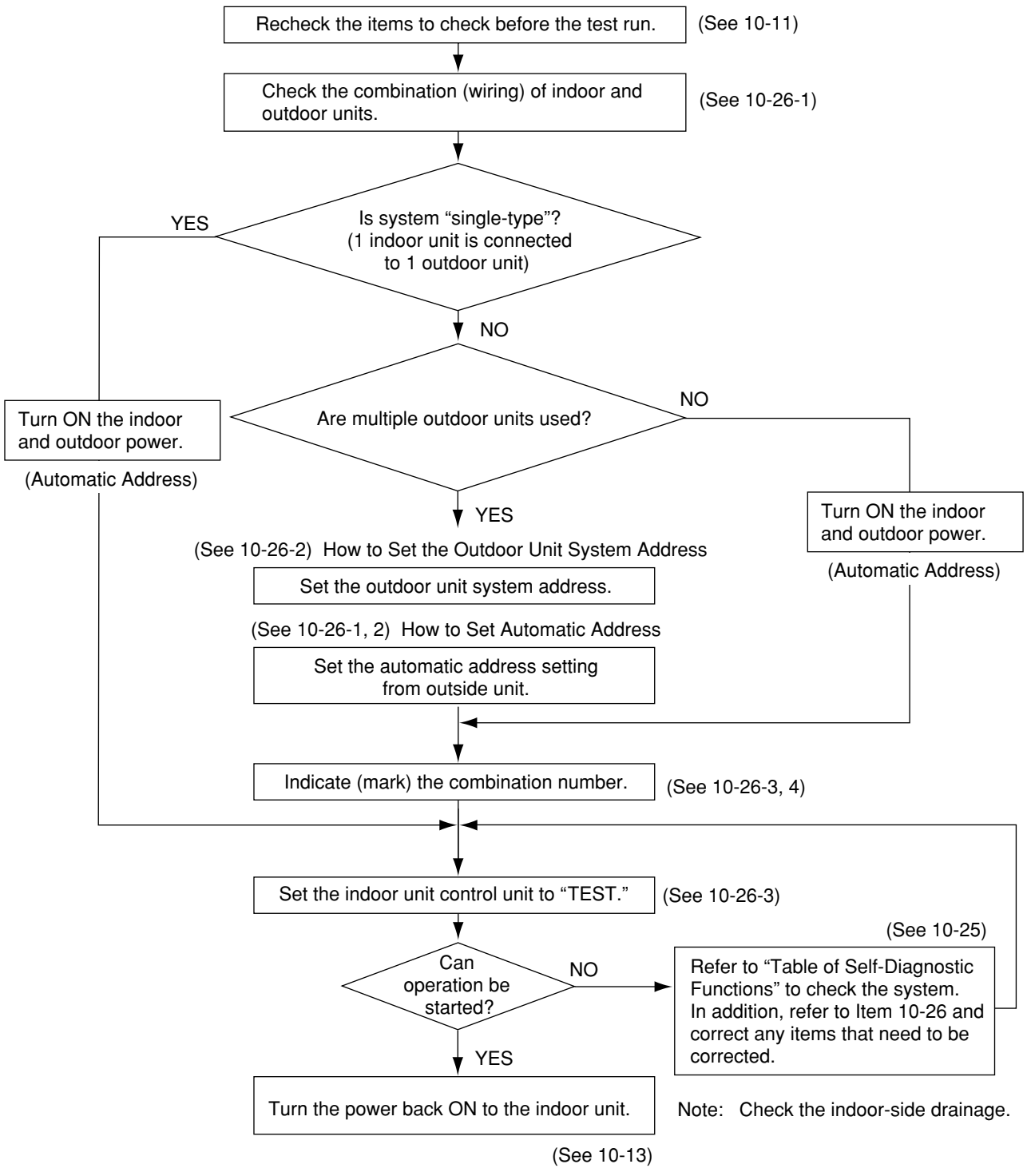


**Fig. 10-24**

## 10-25. Table of Self-Diagnostic Functions and Corrections CAFP SPAFP, DSAFP MAFP Type

| Wired remote controller display | Indoor unit receiver lamp | Cause | Correction |
|---|---|---|---|
| | | Group connection and simultaneous-operation multi system | |
| Nothing is displayed | Nothing is displayed | • Remote controller is not connected with indoor unit correctly.<br>• Indoor unit power is not ON. | Connect the remote controller correctly. Turn ON the indoor unit power. |
| **E01** displayed | Operation lamp is blinking. | • Automatic address setting has not been completed.<br>• Inter-unit control wiring is cut or is not connected correctly.<br>• Remote controller is not connected with indoor unit correctly. | Check the remote controller and inter-unit control wiring.<br>Perform automatic address setting (10-22). |
| **E02** displayed | | • Remote controller is not connected with indoor unit correctly. | Connect the remote controller correctly. |
| **E14** displayed | | • Remote controller crossover wiring is cut or is not connected correctly. | Check the remote controller crossover wiring.<br>Perform automatic address setting again. |
| **E04** displayed | Standby lamp is blinking. | • Indoor-outdoor inter-unit wiring is not connected correctly. | Connect the wiring correctly. |
| **E06** displayed | | • Inter-unit control wiring is cut or is not connected correctly. | Refer to 10-22-1. Basic wiring diagram, and make the correct setting. |
| **E15** displayed | | • Indoor unit capacity is too low. | Check that the total capacities of the indoor and outdoor units are appropriate. |
| **E16** displayed | | • Indoor unit capacity is too high. | |
| **P05** displayed | Timer lamp and Standby lamp are blinking alternately. | • Reversed phase or open phase in the 3-phase power at one of the outdoor units in the group.<br>• Insufficient gas | Reverse 2 phases of the outdoor unit 3-phase power and connect them correctly. |
| **P09** displayed | Timer lamp and Standby lamp are blinking alternately. | • Ceiling panel connector at one of the indoor units in the group is not connected correctly. | Connect the indoor unit ceiling panel connector correctly. |
| **P12** displayed | | • DC fan trouble at one of the indoor units in the group. | Check whether the fan holder is loose.<br>Check the wiring between the DC fan and the PCB. |
| **L02**<br>**L13** displayed | Both the Operation lamp and Standby lamp are blinking together. | • Indoor-outdoor unit type mismatch. | Check that the indoor and outdoor unit types are correct. |
| **L07** displayed | | • Remote controller crossover wiring is connected to the indoor unit, however it is set for individual operation. | Perform automatic address setting (10-22). |
| **L10** displayed | | • Check outdoor operation with separate maintanance-use remote controller. | |

### 10-26. Automatic Address Setting

#### 10-26-1. Basic wiring diagram

● **Link wiring**

**NOTE**

- A terminal plug (black) is attached to each of the outdoor unit control PCBs. At only 1 outdoor unit, leave the terminal plug short-circuit socket on the “Yes” side. At all the other outdoor units, change the socket (from “Yes” to “No”).
- A maximum of 8 indoor units can be connected to 1 remote controller for group control.

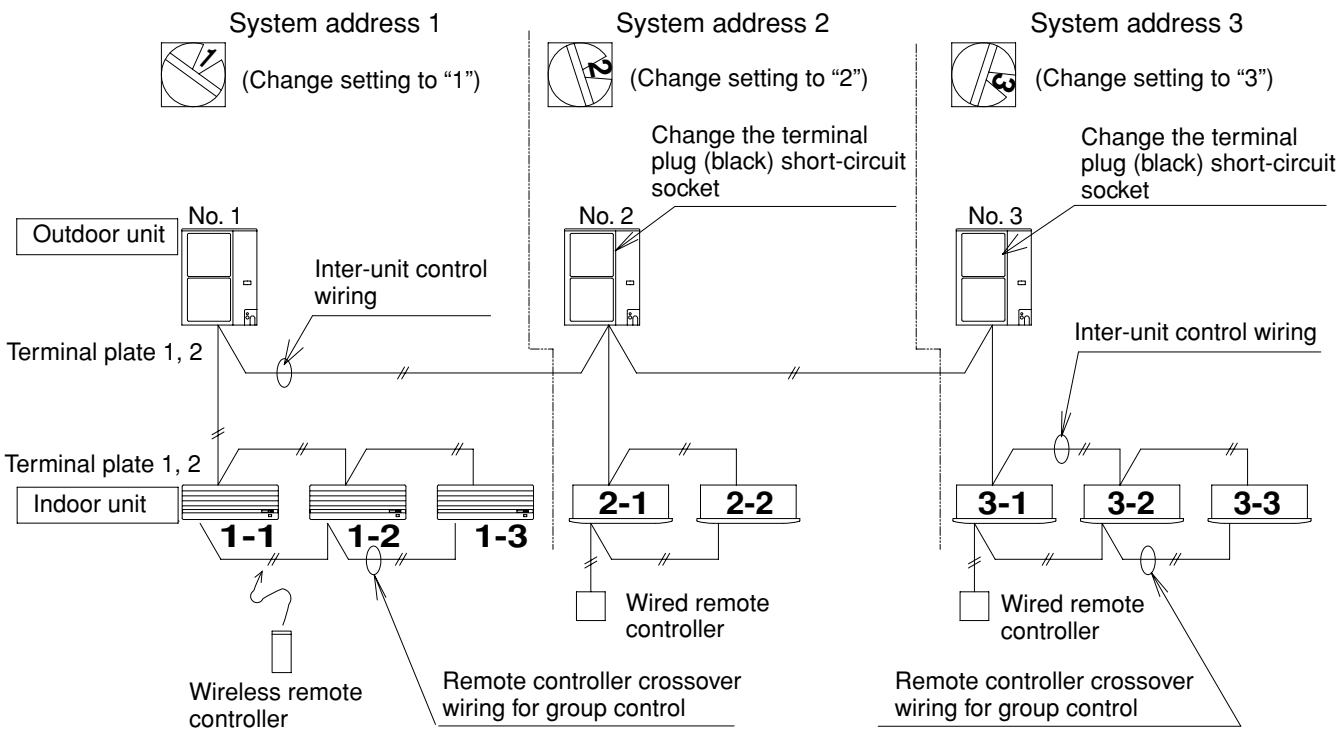


* If wall-mounted type units are used for a simultaneous-operation multi system (group control), refer to 10-16. System Control (basic wiring diagrams and wiring procedures) on the reverse cover of this manual when wiring.

**Fig. 10-25**

### 10-26-2. Setting the outdoor unit system addresses

For basic wiring diagram (Set the system addresses: 1, 2, 3...)

Outdoor unit control PCB  3 – 5 HP

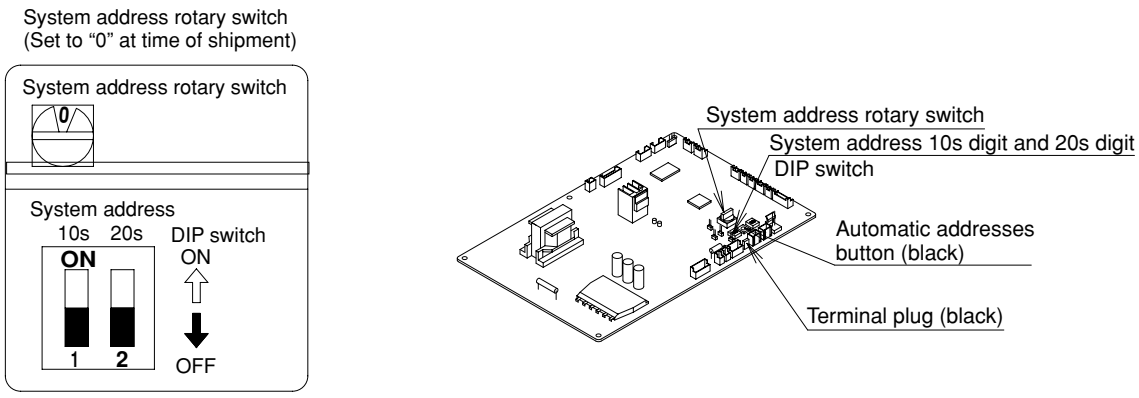


**Fig. 10-26**

| System address No. | System address 10s digit (2P DIP switch) | System address 1s place (Rotary switch) |
|---|---|---|
| 0 Automatic address (Setting at shipment = “0”) | Both OFF | “0” setting |
| 1 (If outdoor unit is No. 1) | Both OFF | “1” setting |
| 2 (If outdoor unit is No. 2) | Both OFF | “2” setting |
| 11 (If outdoor unit is No. 11) | 10s digit ON | “1” setting |
| 21 (If outdoor unit is No. 21) | 20s digit ON | “1” setting |
| 30 (If outdoor unit is No. 30) | 10s digit and 20s digit ON | “0” setting |

**Case 1**

- If the power can be turned ON separately for the indoor and outdoor units in each system:
  (The indoor unit addresses can be set without running the compressor.)

**Automatic address setting from the outdoor unit (MAFP type)**

(1) Turn on the indoor and outdoor unit power for refrigerant system 1.
Press and hold the automatic address setting button (black) for 1 second or longer at the outdoor unit where the power was turned ON.
The compressor operates when the power is turned ON at a different outdoor unit.
↓
Communication for automatic address setting begins.
↓
LED 1 and 2 on the outdoor unit control PCB blink alternately, and turn OFF when address setting is completed.
↓ <Approximately 4 – 5 minutes are required.>

(2) Next, turn ON the power only at the indoor and outdoor units in a different system. Press the automatic address setting button (black) on the outdoor unit.
↓
LED 1 and 2 on the outdoor unit control PCB blink alternately, and turn OFF when address setting is completed.
↓
Repeat the same procedure for each system and complete automatic address setting.
↓

(3) Operation using the remote controller is now possible.

**Case 2**

- If the power cannot be turned ON separately for the indoor and outdoor units in each system:
  The compressors must be run in order to automatically set the indoor unit addresses. Therefore perform this step after completing the refrigerant tubing work.

(1) Turn ON the power to the indoor and outdoor units in all refrigerant systems.
↓

When setting addresses in cooling mode

(2) Short-circuit the mode-change pin at the outdoor unit where automatic address setting will be performed. Then press the automatic address setting button (black).
↓

When setting addresses in heating mode

(2) Press the automatic address setting button (black) at the outdoor unit where automatic address setting will be performed.
↓

(3) LED 1 and 2 blink alternately. The compressors begin running in cool (or heat) mode. Communication for automatic address setting begins, using the temperature changes at the indoor units.
↓

Address setting is completed when the compressors stop and the LED indicators turn OFF. <Approximately 15 minutes is required for 1 system.>
If address setting fails, LED 1 and 2 blink simultaneously and the alarm contents are displayed at the remote controller.

(4) After 1 system is completed, be sure to press the automatic address setting button (black) at the other outdoor units to complete automatic address setting in the same way for each system.

(5) Operation using the remote controller is now possible.

### 10-26-3. Checking indoor unit addresses

Use the remote controller to check the addresses of the indoor units. Press and hold the ⊘ button and ⊘ button for 4 seconds or longer (simple settings mode, “ALL” appears on the remote controller). Then press the UNIT button and select the indoor address.
(For the system addresses of the No. 1 outdoor unit, each time the button is pressed, the address changes as follows: 1-1, 1-2, ... 1-1, ...)
The indoor unit fan operates only at the selected indoor unit. Confirm the indoor unit address. (For the system addresses of the No. 2 outdoor unit, the displayed addresses are 2-1, 2-2, ...)

Press the ⊘ button again to return to the normal remote controller mode.

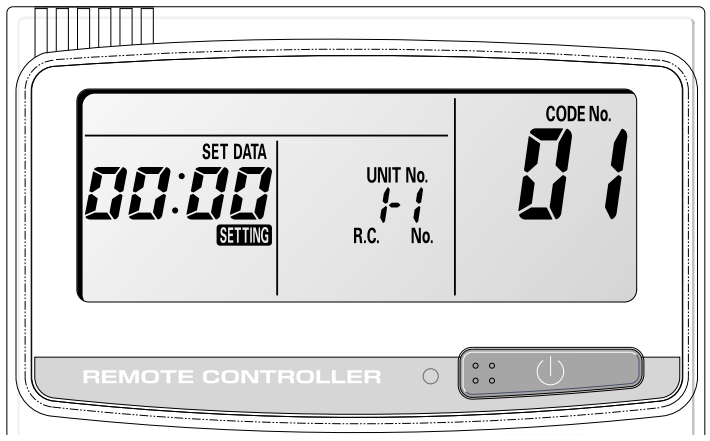


**Fig. 10-27**

### 10-26-4. Indicating (marking) the indoor and outdoor unit combination number

Indicate (mark) the number after automatic address setting is completed.

(1) So that the combination of each indoor unit can be easily checked when multiple units are installed, ensure that the indoor and outdoor unit numbers correspond to the system address number on the outdoor unit control PCB, and use a magic marker or similar means which cannot be easily removed to indicate the numbers in an easily visible location on the indoor units (near the indoor unit nameplates).

Example: (Outdoor) 1 – (Indoor) 1, 2... (Outdoor) 2 - (Indoor) 1, 2...

(2) These numbers will be needed for maintenance. Be sure to indicate them.

### 10-26-5. Setting a wired remote controller as a sub remote controller

Change the remote controller address connected on the reverse side of the remote controller switch PCB from the Main position to the Sub position.

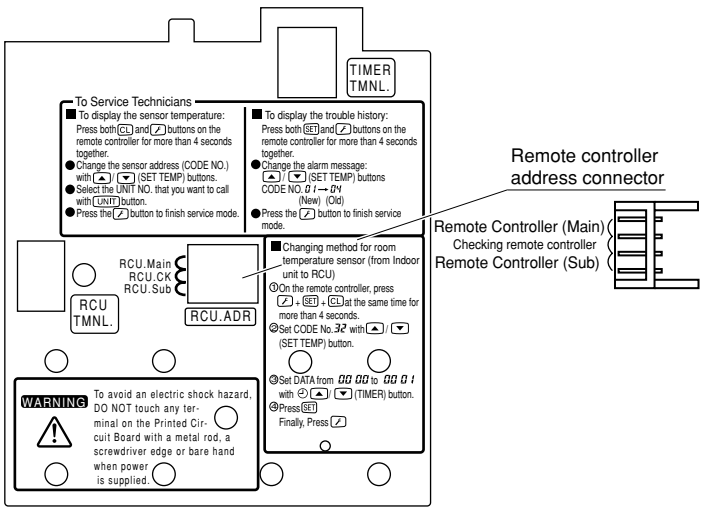


**Fig. 10-28**

**Installing the Remote Controller**

- If the remote controller is to be installed onto a wall or other surface for use, first place the remote controller in the location where it will be installed and press ⏻ (ON / OFF). Confirm that the “signal-received” sound occurs at the indoor unit and that the A/C begins operating.

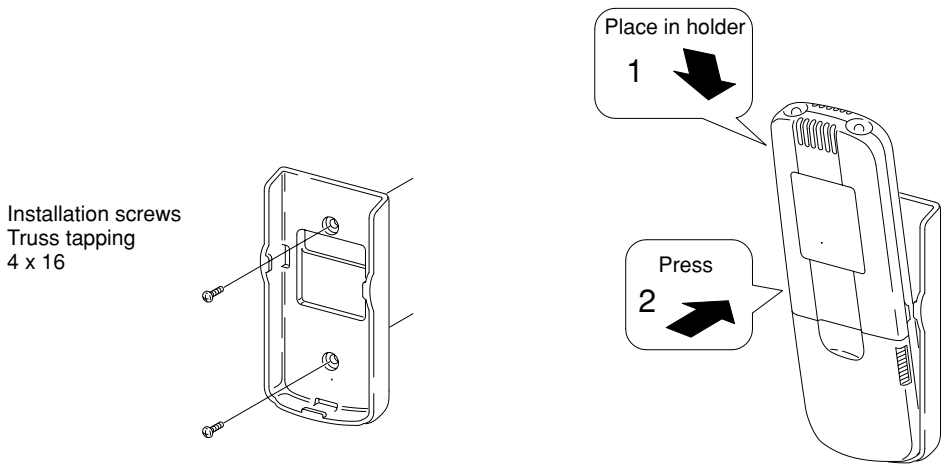


**Fig. 10-29**

- Installing the batteries

(1) Press on both sides of the remote controller cover and slide it downwards to remove it.

(2) Insert 2 AAA alkaline batteries. (Pay attention to the + and – directions.)

(3) Use an object with a sharp point to press the ACL (ALL CLEAR) button, then reattach the cover. (Be sure to press the ACL (ALL CLEAR) button after replacing the batteries.)

To remove the remote controller, pull it towards you.

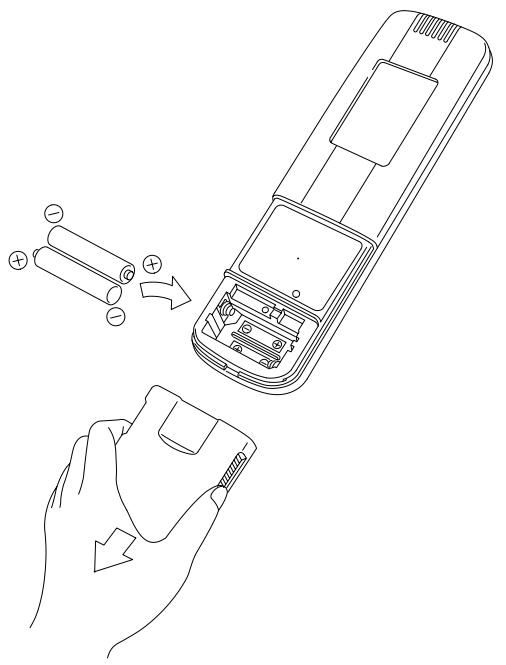

**Fig. 10-30**

**Precautions for remote controller installation**

- Before mounting the remote controller on the wall, place the unit at the mounting position, then turn on any fluorescent lamps, press the ON/OFF button, and check that the air conditioner operates correctly.

  When using the remote controller to detect the room temperature, observe the following precautions during installation:

  • Avoid locations where the remote controller will be exposed to the direct path of air blown from the air conditioner.

  • Avoid locations where the remote controller will be exposed to direct sunlight.

  • Avoid locations where the remote controller will be exposed to direct heat sources.

### 10-27. Caution for Pump Down

Pump down means refrigerant gas in the system is returned to the outdoor unit. Pump down is used when the unit is to be moved, or before servicing the refrigerant circuit.

**CAUTION**

- **This outdoor unit cannot collect more than the rated refrigerant amount as shown by the nameplate on the back.**
- **If the amount of refrigerant is more than that recommended, do not conduct pump down. In this case use another refrigerant collecting system.**

## Important Information Concerning Pump Down

Observe the following items when using pump down operation to recover refrigerant.

(1) If the length of inter-unit tubing exceeds 30 m, pump down cannot be used to recover the refrigerant. (The overload protection device may be activated.)
In that case, use refrigerant recovery equipment to recover the refrigerant.

(2) Press and hold the “Recover refrigerant” button on the outdoor unit PCB for 1 second or longer.
- During refrigerant recovery, LED 1 blinks and LED 2 is lit.
- Close the liquid-side valve during refrigerant recovery. If the unit is operated for 10 minutes or longer with the liquid-side valve open, operation will be stopped, although no alarm will be displayed on the remote controller. If this occurs, close the valve and restart operation.

(3) When the valve service port pressure is approximately 0.1 MPa, press the S005 (Refrigerant recovery) button again to end refrigerant recovery.
- In order to protect the compressor, do not continue operating to generate a negative pressure in the inter-unit tubing.

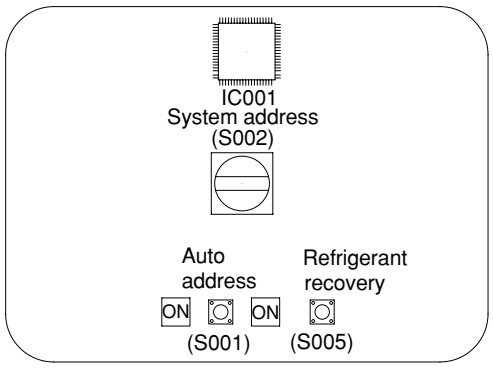


The S005 (Refrigerant recovery) button is located at the bottom right of the outdoor unit PCB, as shown in the figure at left.

# 11. HOW TO INSTALL THE WIRELESS REMOTE CONTROLLER RECEIVER

## ■ K70D037Z for 4-Way Cassette (CAFP Type)

### 11-1. Installing the Receiver Unit

The only corner where the receiver unit can be installed is the one shown in Fig. 11-1. Therefore, consider the direction of the panel when it is installed on the indoor unit.

(1) Remove the intake grille.

(2) Remove the screws that fasten the adjustable corner cap, then slide the adjustable corner cap to the side to remove it. (Fig. 11-2)

(3) The square hole used for the panel wiring is filled with packing (sponge material) used for insulation.* Remove the packing, then pass the wiring from the wireless receiver unit through the grill. Twist the wires together and use a cable fastener to fasten them and attach with a screw, then replace the packing in the hole as it was before. (Fig. 11-3)

* If this packing is not used, there is danger of condensation on the wiring. Be sure to replace the packing.

(4) After completing wiring as described in “Wiring the Receiver Unit” on the next page, twist the wires together and use a cable fastener to fasten them, leaving a length of wiring that is long enough to permit removal of the adjustable corner cap. (Fig. 11-3)

(5) Install the receiver unit in the panel. At this time, slide the receiver unit so that each of the 3 tabs fits into its respective hole. Take care that the wires are not pinched. (Fig. 11-4)

* Refer to the instruction manual provided with the panel.

**NOTE**

- Do not twist the control wiring together with the power wiring because this may cause a malfunction.
- Install a noise filter or take other appropriate action if electrical noise affects the power supply circuit of the unit.

* For wiring and test run procedures, refer to “Wiring the Receiver Unit” and “Test Run.”

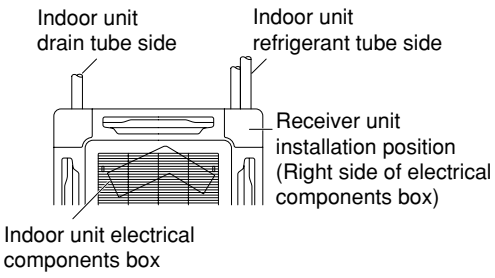


**Fig. 11-1**

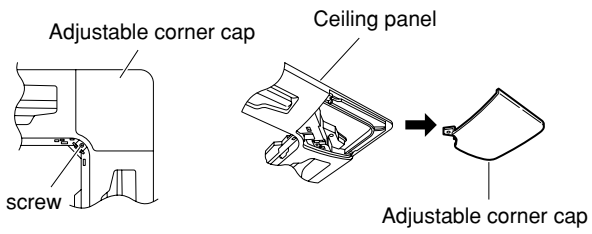


**Fig. 11-2**

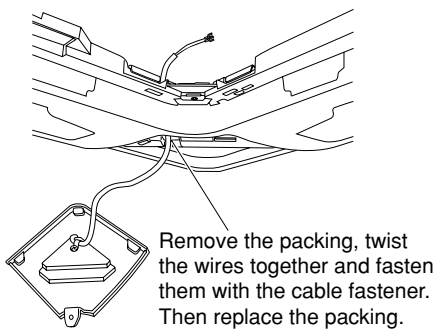


**Fig. 11-3**

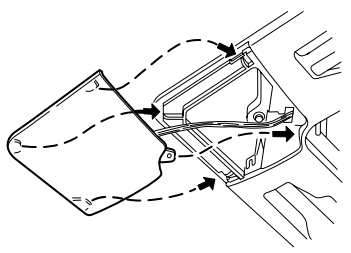

**Fig. 11-4**

CAFP

## 11-2. Accessories

| No. | Parts | Q'ty |
|---|---|---|
| 1 | Receiver unit 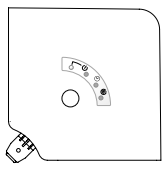 | 1 |
| 2 | Remote control unit 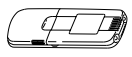 | 1 |
| 3 | Remote control holder 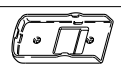 | 1 |

| No. | Parts | Q'ty |
|---|---|---|
| 4 | AAA alkaline battery 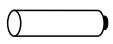 | 2 |
| 5 | Tapping screw 4 × 16  | 2 |
| 6 | Clamp  | 1 |
| 7 | Fastening screw 4 × 12  | 1 |

## 11-3. Wiring the Receiver Unit

CAFP

- Connection diagram

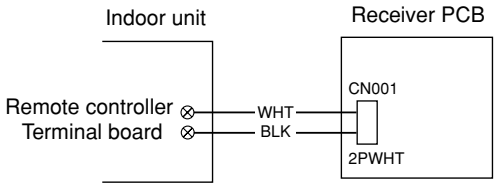


- Connect the wire from the receiver unit to the indoor unit remote controller terminal board. (The wire has no polarity.)

## 11-4. Precautions on Simultaneous Installation of Wired Remote Controller and Wireless Remote Controller

By installing a wired remote controller, the wireless remote controller kit can permit dual remote control operation at the same time.

(Up to 2 units of remote controllers – a wireless kit and a wired unit – can be installed.)

Dual remote control operation can control 1 or multiple air conditioners using several remote controllers.

**CAUTION**

- **Be sure to determine the correct terminal numbers on the indoor unit when wiring the remote controller. The remote controller will be damaged if high voltage (such as 220 – 240 VAC) is applied.**
- **The wireless remote controller kit components cannot be used for more than 1 indoor unit at a time. (However, separate receiver units may be used simultaneously.)**
- **When a wireless remote controller kit and a wired remote controller are used simultaneously, assign either the wireless remote controller or the wired remote controller as the sub remote controller unit.**

(1) To assign the wired remote controller as the sub unit, locate the address connector at the rear of the wired remote controller PCB and disconnect it. Reconnect it to the sub unit position.

(2) To assign the wireless remote controller as the sub unit, locate the dip switch [S003] on the wireless receiver unit PCB. Set the No. 3 switch to the ON position.

**When 1 indoor unit is operated with 2 remote controllers:**
(The indoor unit runs according to which of the remote controllers is assigned as the Main or Sub unit.)

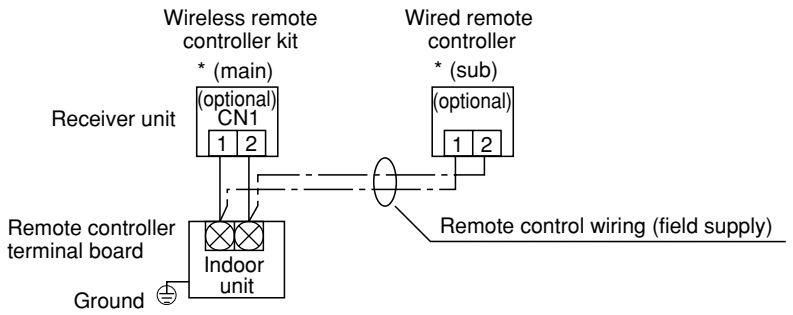


* Use field wiring cables with a cross-sectional area of at least 0.5mm$^2$ to 2mm$^2$.
* The maximum total length of crossover cables must be no longer than 400m.

**When several groups of indoor units are operated with 2 remote controllers:**
(The remote controller (main or sub unit) can operate with any indoor unit.)

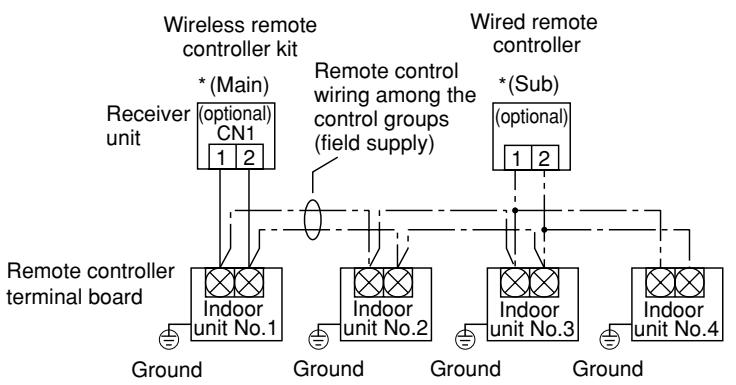


* Use field wiring cables with a cross-sectional area of at least 0.5mm$^2$ to 2mm$^2$ .
* The maximum total length of crossover cables must be no longer than 200m.

**Fig. 11-5**

### 11-5. How to Use the Test Run Setting

1. Set DIP switch [S003] No. 1 on the wireless receiver unit PCB from OFF to ON.
2. All indicator lamps in the display section blink during test run operation.
3. No temperature control is available during the test run.
4. After the test run, be sure to reset DIP switch No. 1 back to the OFF position and check that no indicator lamps are blinking. Then remount and attach the PCB cover as before.

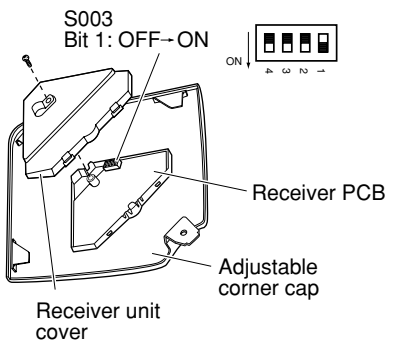


**Fig. 11-6**

**NOTE**

To avoid placing excessive operating load on the equipment, use this function only when conducting the test run.

## ■ K70D040Z for Ceiling Mounted (SPAFP Type)

### 11-6. Installing the Receiver Unit

(1) To take off the side panel, open the intake grille and remove the screw. Then remove the side panel by moving it toward the front (direction of arrow). (Fig. 11-7)

(2) Wrap the end of a standard (flat) screwdriver blade with vinyl tape. Then insert the screwdriver blade into the groove on the side of the cover below the "O" mark, and pry open the cover. (Fig. 11-8)
(Take care not to scratch the panel.)

(3) Pass the lead wire through the panel, then install the receiver unit in the panel hole.
(The projections on the receiver unit engage the panel holes to attach the unit.)

(4) Fasten the receiver lead wire to the fastener that holds the louver motor wiring. (Fig. 11-9)

(5) Reattach the side panel.

(6) Route the lead wire from the receiver unit along the louver motor wiring and other wiring and fasten them with a fastener. (Fig. 11-10)

* Access the hole at the top of the electrical component box to draw in the wiring.



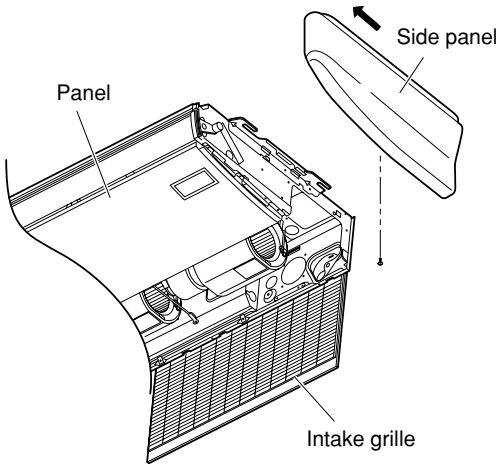


**Fig. 11-7**

**NOTE**

- Do not twist the control wiring with the power wiring because this may cause malfunction.
- Install a noise filter or take other appropriate action if electrical noise disturbs the unit's power supply circuit.

* For the wiring and test run procedures, refer to "Wiring the Receiver Unit" and "Test Run."

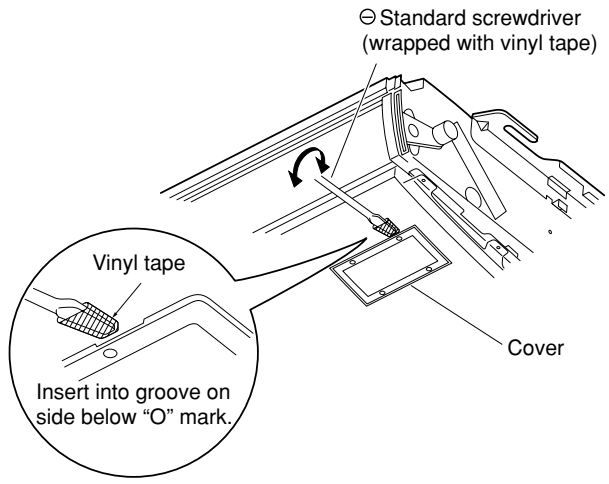


**Fig. 11-8**

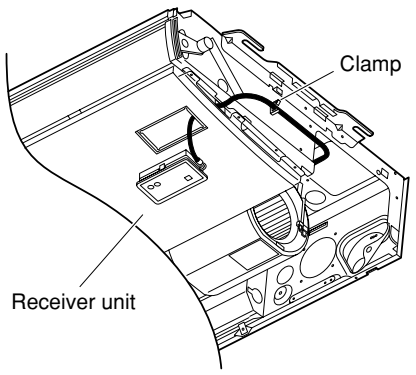


**Fig. 11-9**

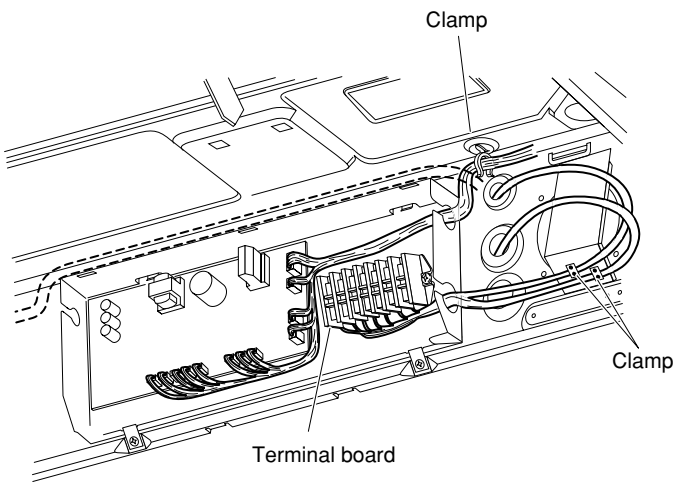


**Fig. 11-10**

### 11-7. Accessories Supplied with Unit

| No. | t | Q'ty |
|---|---|---|
| 1 | Receiver unit 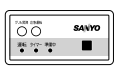 | 1 |
| 2 | Remote control unit 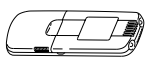 | 1 |
| 3 | Remote control holder 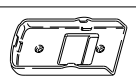 | 1 |

| No. | Parts | Q'ty |
|---|---|---|
| 4 | AAA alkaline battery  | 2 |
| 5 | Tapping screw $4 \times 16$  | 2 |

### 11-8. Wiring the Receiver Unit

- Connection diagram

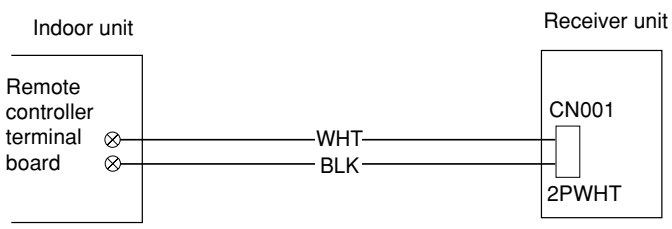


- Connect the provided wire (already connected to the receiver unit) to the indoor unit remote controller terminal board.
  (The wire has no polarity.)

### 11-9. Precautions on Simultaneous Installation of Wired Remote Controller and Wireless Remote Controller

By installing a wired remote controller, the wireless receiver unit can permit dual remote control operation at the same time.
(Up to 2 units of remote controllers – a wireless remote controller and a wired remote controller – can be installed.)

Dual remote control operation can control 1 or multiple air conditioners using several remote controllers.

**CAUTION**

- **Be sure to determine the correct terminal numbers on the indoor unit when wiring the remote controller. The remote controller will be damaged if high voltage (such as 220 – 240 VAC) is applied.**
- **The wireless receiver unit components cannot be used for more than 1 indoor unit at a time. (However, separate receiver units may be used simultaneously.)**
- **When a wireless receiver unit and a wired remote controller are used simultaneously, assign either the wireless remote controller or the wired remote controller as the sub remote controller unit.**

(1) To assign the wired remote controller as the sub unit, locate the address connector at the rear of the wired remote controller PCB and disconnect it. Reconnect it to the sub unit position.

(2) To assign the wireless remote controller as the sub unit, locate the DIP switch [S003] on the wireless control unit. Set the No. 3 switch to the ON position.

SPAFP

**When 1 indoor unit is operated with 2 remote controllers:**

(The indoor unit runs according to which of the remote controllers is assigned as the main or sub unit.)

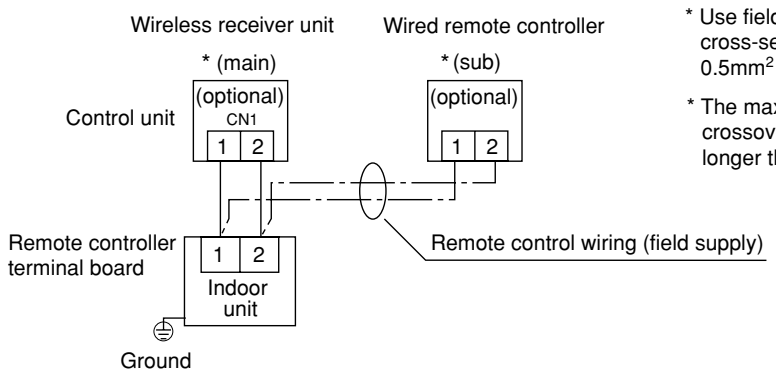


* Use field wiring cables with a cross-sectional area of at least 0.5mm$^2$ to 2mm$^2$.
* The maximum total length of crossover cables must be no longer than 400m.

**When several groups of indoor units are operated with 2 remote controllers:**

(The remote controller (main or sub unit) can operate with any indoor unit.)

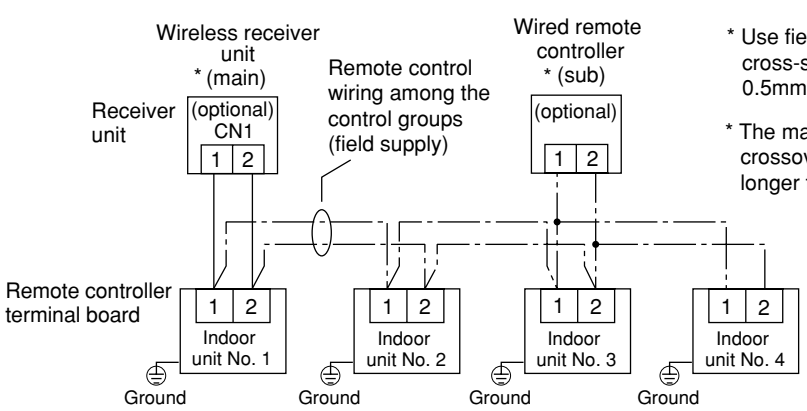


* Use field wiring cables with a cross-sectional area of at least 0.5mm$^2$ to 2mm$^2$.
* The maximum total length of crossover cables must be no longer than 200m.

**Fig. 11-11**

SPAFP

## 11-10. How to Use the Test Run Setting

1. Set DIP switch [S003] No. 1 on the wireless receiver unit PCB from OFF to ON.
2. All indicator lamps in the display section blink during test run operation.
3. No temperature control is available during the test run.
4. After the test run, be sure to reset DIP switch No. 1 back to the OFF position and check that no indicator lamps are blinking. Then remount and attach the PCB cover as before.

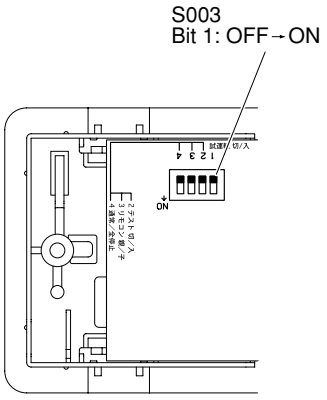


**Fig. 11-12**

**NOTE**

- To avoid placing excessive operating load on the equipment, use this function only when conducting the test run.
- The unit does not receive remote controller signals for approximately 1 minute after the power is turned ON. This is not a malfunction. (The signals are received, but have no immediate effect.)

## ■ K70D039Z for DSAFP Type

### 11-11. Accessories Supplied with Separate Receiver Unit

| No. | Parts | Q'ty |
|---|---|---|
| 1 | Separate receiver unit (provided 200mm power cable)  | 1 |
| 2 | Plate mounting  | 1 |
| 3 | Screws M4 × 25  | 2 |
| 4 | Screws M4 × 40  | 2 |
| 5 | Wood screws  | 2 |

| No. | Parts | Q'ty |
|---|---|---|
| 6 | Spacer 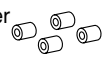 | 4 |
| 7 | Wire joints  | 2 |
| 8 | Clamp  | 1 |
| 9 | Pattern template 95 × 51  | 1 |

### 11-12. Important Information for Installation of 1 Separate Receiver Unit

**<Installation location>**

- Do not install in a location where the air contains oil mist, such as in a kitchen or factory.
- Do not install next to a window, or in any other location directly exposed to sunlight and outside air.
- Do not install nearby devices which can be expected to produce electrical noise, such as elevators, automatic doors, and industrial sewing machines.
- If the receiver unit is installed near a rapid-start type or inverter-type fluorescent lamp (a lamp which does not include a glow lamp), it may not be possible to receive the wireless remote controller signal in some cases. In order to prevent interference from fluorescent lamps, leave a minimum of 2 meters between the receiver unit and the fluorescent lamps, and install the receiver unit in a location where it can receive the wireless remote controller signal when the fluorescent lamps are lit.

### 11-13. How to Install the Separate Receiver Unit

**NOTE**

- To avoid malfunction of the remote controller, do not assemble or run remote control wiring together with the power cables, and do not enclose them in the same metal conduit.
- When the power unit induces electrical noise, it is recommended that a noise filter or the like be installed.



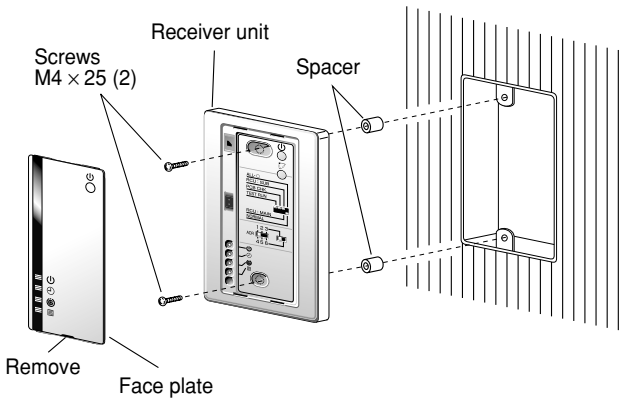


**Fig. 11-22**

- For flush mounting into a wall, install the separate receiver unit in a metal switch box (field supply) that has been recessed into the wall in advance.

1. Insert a flathead screwdriver or similar tool into the notch, and remove the face plate.
2. Fix the receiver unit with 2 M4 screws provided. Do not overly tighten, and use the provided spacers. If the receiver unit does not fit in the wall, cut spacers to adjust the clearance.
3. Connect the receiver unit wiring (2-core cable) with the cables extended from the indoor unit. (Refer to the section on receiver unit wiring.) Be sure to determine the correct terminal numbers on the indoor unit when wiring the receiver unit. The remote controller will be damaged if high voltage (such as 220 – 240 VAC) is applied.
4. Reinstall the face plate.

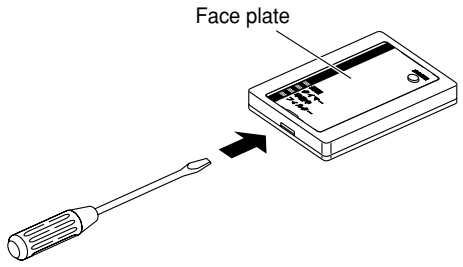


**Fig. 11-23**

- When using exposed mounting for the receiver unit, install onto a wall where the receiver unit can be attached.

1. Insert a flathead screwdriver or similar tool into the groove on the bottom of the receiver unit. Pry open with the screwdriver and remove the lower case. (Fig. 11-23).
2. In order to later pass the receiver wiring out through the upper case (thin part at the top center), use nippers or a similar tool to cut a notch in the same size as the remote controller cord (optional). (Fig. 11-24)
3. Disconnect the wires that were connected to the connector at the time of shipment.
4. Fasten the remote controller cord (optional) at the position shown in Fig. 11-25, using the provided clamper. Then connect the cord to the receiver connector.
5. Shape the remote controller cord as shown in Fig. 11-25 so that it fits at the top inside the receiver unit, above the PCB. Then attach the lower case. At this time, bend the head of the clamp so that it faces sideways.
6. Remove the nameplate and use 2 wood screws to attach the receiver unit.
7. Use the provided cord clips to fasten the remote controller cord to the wall.
8. Reattach the nameplate.

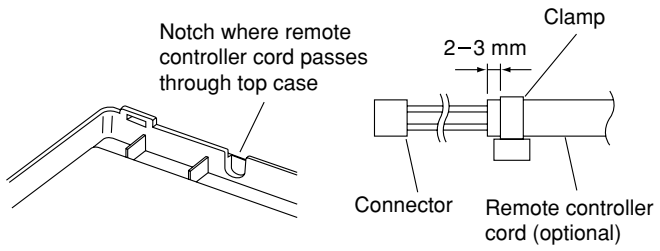


**Fig. 11-24**

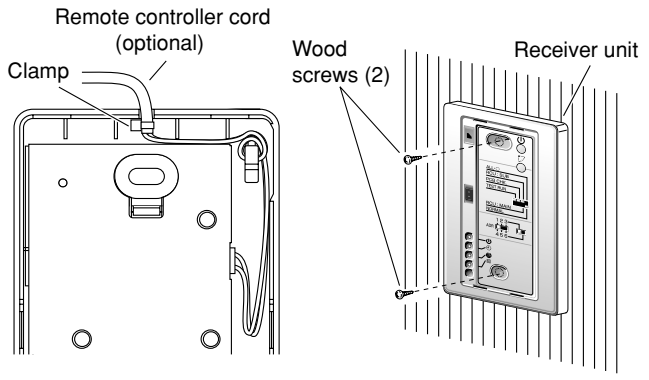


**Fig. 11-25**

DSAFP

- If the separate receiver unit is installed on the ceiling, use the provided ceiling mounting bracket for installation.

1. Insert a screwdriver or similar tool into the notch at the bottom to remove the receiver nameplate.
2. Cut a section out of the ceiling along the provided paper pattern (95 × 51 mm).
3. Pass the wire through the provided mounting bracket and insert the bracket into the installation hole. (Fig. 11-26)
4. Use bracket parts (A) and (B) to securely grip the ceiling material. (Fig. 11-27)
5. Connect the receiver wire (2-core) to the wire from the indoor unit.
   (Refer to “Wiring the Receiver Unit.”)
   Check the terminal number on the indoor unit before wiring the receiver unit and be sure not to wire incorrectly. (The unit will be damaged if high voltage, such as 200 VAC, is applied.)
6. Adjust the provided spacers so that they are several millimeters larger than the thickness of the ceiling material. Pass the 2 supplied screws (M4 × 40) through the spacers and tighten them enough to hold the receiver unit in place.
7. Return parts (A) and (B) through the gap between the ceiling and receiver unit so that they are contained in the openings. Then tighten the screws. Do not tighten the screws excessively. This may result in damage or deformation of the case. Tighten to the point where the receiver unit can be moved slightly by hand. (Fig. 11-28)
8. Reattach the nameplate.

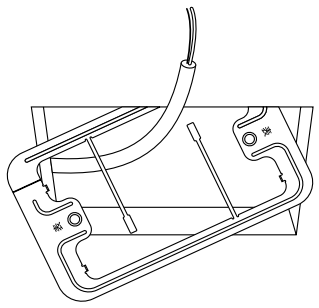

**Fig. 11-26**

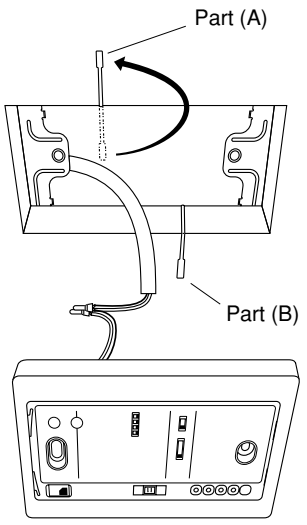


**Fig. 11-27**

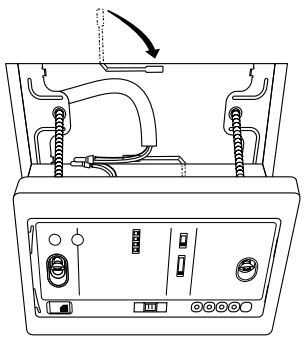

**Fig. 11-28**

## 11-14. Wiring the Separate Receiver Unit

* Use wires that are 0.5 mm² – 2 mm² in diameter.

* The wiring length must not exceed 400 m.

**<Flush Mounting>**

● Connection diagram

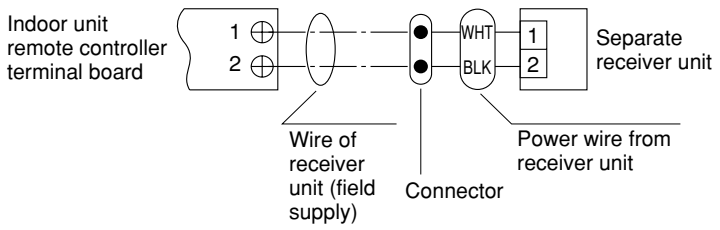


| | |
|---|---|
| Provided wire joint (WHT 2) | 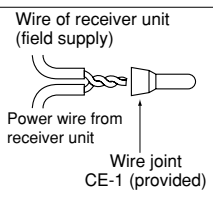  1. Strip the insulation to approximately 14mm from the ends of the wires to be connected.<br>2. Twist together the 2 wires and create a crimp connection at the wire joint.<br>3. If a special crimping tool is not used, or if the connection is soldered, insulate the wires using insulation tape. |

**<Exposed Mounting>**

● Connection diagram

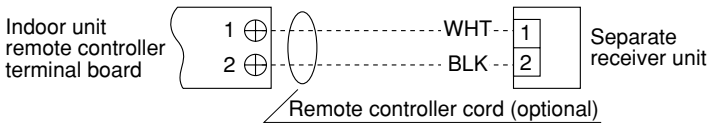


● Use the remote controller cord (optional) for wiring the separate receiver unit.

1. For the methods used to install the remote controller cord, refer to “For flush mounting into a wall, install the separate receiver unit in a metal switch box (field supply) that has been recessed into the wall in advance.”
2. When using the remote controller cord (optional), refer to the instruction manual that came with the cord.
   Check the terminal number on the indoor unit before wiring the remote controller and be sure not to wire incorrectly. (The unit will be damaged if high voltage, such as 220 – 240 VAC, is applied to it.)

### 11-15. Important Information for Installation of 2 Separate Receiver Units

When using 2 receiver units to operate 1 or more indoor units at the same time, follow the procedure below to install them.

- Installation method

1. If 2 remote controllers are installed, set one of them as the “main remote controller” (setting at time of factory shipment).
2. At the other remote controller, remove the receiver nameplate and switch the DIP switch to “sub remote controller.” Under these conditions, the receiver unit functions as the sub receiver unit.
   * The TIMER lamp lights only at the remote controller that receives the signal.

- Basic wiring diagram
  * When connecting the wires, be careful not to wire incorrectly.
    (Incorrect wiring will damage the unit.)

- Using 2 separate receiver units to control 1 indoor unit:

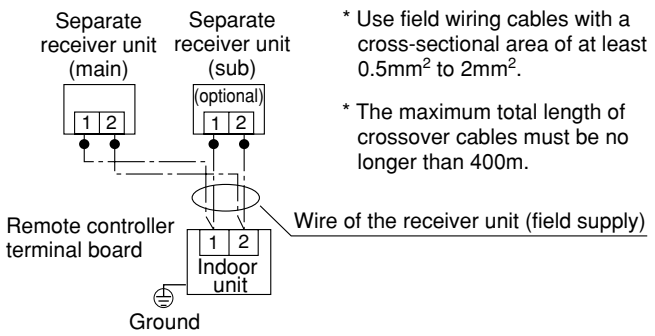


- Using 2 separate receiver units to control a group of multiple indoor units:
  * The main and sub receiver units will operate regardless of the indoor unit in which they are installed.

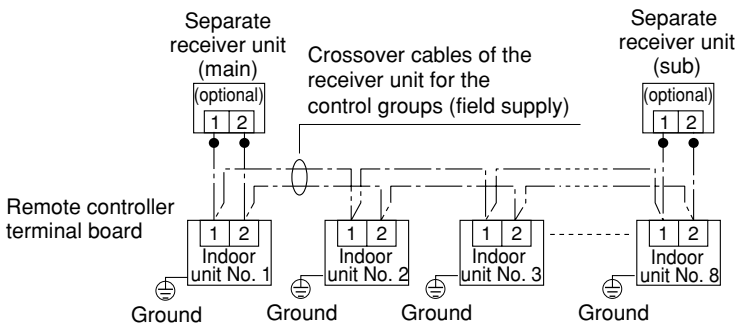


* Use wires that are 0.5 mm² – 2 mm² in diameter.
* The wiring length must not exceed 400 m.

### 11-16. Test Run Setting

1. Remove the receiver unit face plate, and set the DIP switch to “Test Run - ON” position.
2. Run the air conditioner using the wireless remote controller by pressing the “ON/OFF” button.

- All LEDs (“RUN,” “TIMER” and “STANDBY”) blink during test run operation.

- No temperature control is effective with the wireless remote controller in the “Test Run – ON” position.
  To avoid mechanical strain on the air conditioner, do not use this mode except for conducting a test run.

3. Select any one of the operation modes HEAT, COOL or FAN for the test run.
   * The outdoor unit will not start running for about 3 minutes after the power ON button is pressed.
4. After the test run operation, stop the air conditioner using the wireless remote controller, and then reset the DIP switch in the receiver unit as it was before. (To prevent constant test running of the air conditioner, the receiver unit has a 60-minute off-timer function.)

04-393 DC INV Tech p 64-110 12/13/04 11:35 AM Page 111

Technibel Climatisation

R.D. 28 Reyrieux BP 131-01601 Trévoux CEDEX France
Tél. 04.74.00.92.92 - Fax 04.74.00.42.00
R.C.S. Bourg-en-Bresse B 759 200 728